+U NOT BLOCK OP B CYCLE 31.03.21.2—*1 → D- DE MD U U 02BA 7C18 PP— 01— 4A A → +U NOT BLOCK OP B CYCLE CKT 1 —44.11.41.2; +U NOT BLOCK OP B CYCLE CKT 1 —44.13.21.2

-T NOT BLOCK OPR B CY 31.03.21.2—*2 → F- DE MD T T 02BA 7C16 PQ— 04— 4B G → -T NOT BLOCK OP B CYCLE CKT 1 —44.13.01.2; -T NOT BLOCK OP B CYCLE CKT 1 —44.13.21.2

-T PROCESS 31.02.41.2—*3 → -T PROCESS *E—44.18.21.2; -T PROCESS CK 1 —44.12.01.2; -T PROCESS CK 1 —44.11.11.2; -T PROCESS CK 1 —44.11.41.2; -T PROCESS CK 1 —44.12.11.2; -T PROCESS CK 1 —44.14.01.2; -T PROCESS CK 1 —44.13.21.2; -T PROCESS CK 1 —44.11.21.2

B- -A MD T U 02BA 7E03 C6VW 01— 2C H → D- DE MD T T 02BA 7C16 PQ— 01— 4C A

C- -A MD T U 02BA 7E03 C6VW 02— 2D N → BJ A- T MD U UT 02BA 7E04 CW— 04— 3D E → H- C MD U T 02BA 7D26 CRZV 03— 4D P

6- F-

-T DELTA PROCESS 31.02.11.2—*4 → -T DELTA PROCESS —44.14.01.2; -T DELTA PROCESS —44.14.11.2; -T DELTA PROCESS —44.14.21.2

-T NOT START RESET 37.30.31.2—*5 → -T NOT START RESET —44.12.01.2; -T NOT START RESET —44.11.41.2; -T NOT START RESET —44.11.11.2; -T NOT START RESET —44.11.21.2; -T NOT START RESET *F—44.18.21.2

-T TIME 000-030 31.12.12.2—*6 → -T TIME 000-030 *6—44.15.01.2; -T TIME 000-030 —44.12.01.2; -T TIME 000-030 —44.11.21.2; -T TIME 000-030 —44.11.41.2; -T TIME 000-030 —44.14.11.2

+U A STAR GATE OUT CALC 44.15.01.2—*7 → +U A STAR GATE OUT CALC *H—32.32.21.2

+U B STAR GATE OUT CALC 44.15.11.2—*8 → +U B STAR GATE OUT CALC *J—32.33.31.2

-T TIME 105-000 31.12.42.2—*9 → -T TIME 105-000 *K—44.18.21.2

-T ALTER 37.30.11.2—*A → -T ALTER *L—44.15.01.2

+U UNITS B BUS 42.62.03.2—*B → +U UNITS B BUS *M—44.16.01.2

+U UNITS CZ BUS 42.62.02.2—*C → +U UNITS CZ BUS *N—44.16.11.2

-T I CYCLE 31.24.11.2—*D → -T I CYCLE *P—44.19.21.2; -T I CYCLE —44.11.01.2; -T I CYCLE —44.11.41.2

*1—02B7B01B
*7—02B7C016
*D—02B7B01J
—02A7A26R
—02A7A26K
—02A7D26H

*2—02B7B01D
*8—02B7C01H
*E—02B7C02L
*H—02B7D02N
*M—02B7D01A

*3—02B7E01D
*9—02B7E02C
—02A7A26L
*J—02B7D02P
—02A7D26A

*4—02B7E01M
*A—02B7D02L
*F—02B7D01B
*K—02B7C02M
*N—02B7C01R

*5—02B7D026
*B—02E7A01L
—02A7D26B
—02A7A26M
—02A7C26R

*6—02B7A02L
*C—02B7D02M
*6—02B7C02R
*L—02B7C02K
*P—02B7D01H

COMMENTS

| TAG | DATE | E.C.NO. | TAG | DATE | E.C.NO. | TAG | DATE | E.C.NO. | TAG | DATE | E.C.NO. |
|---|---|---|---|---|---|---|---|---|---|---|---|
| A | 06-02-61 | 110320K | B | 12-06-61 | 113422 | C | 06-12-62 | 114036 | | | |

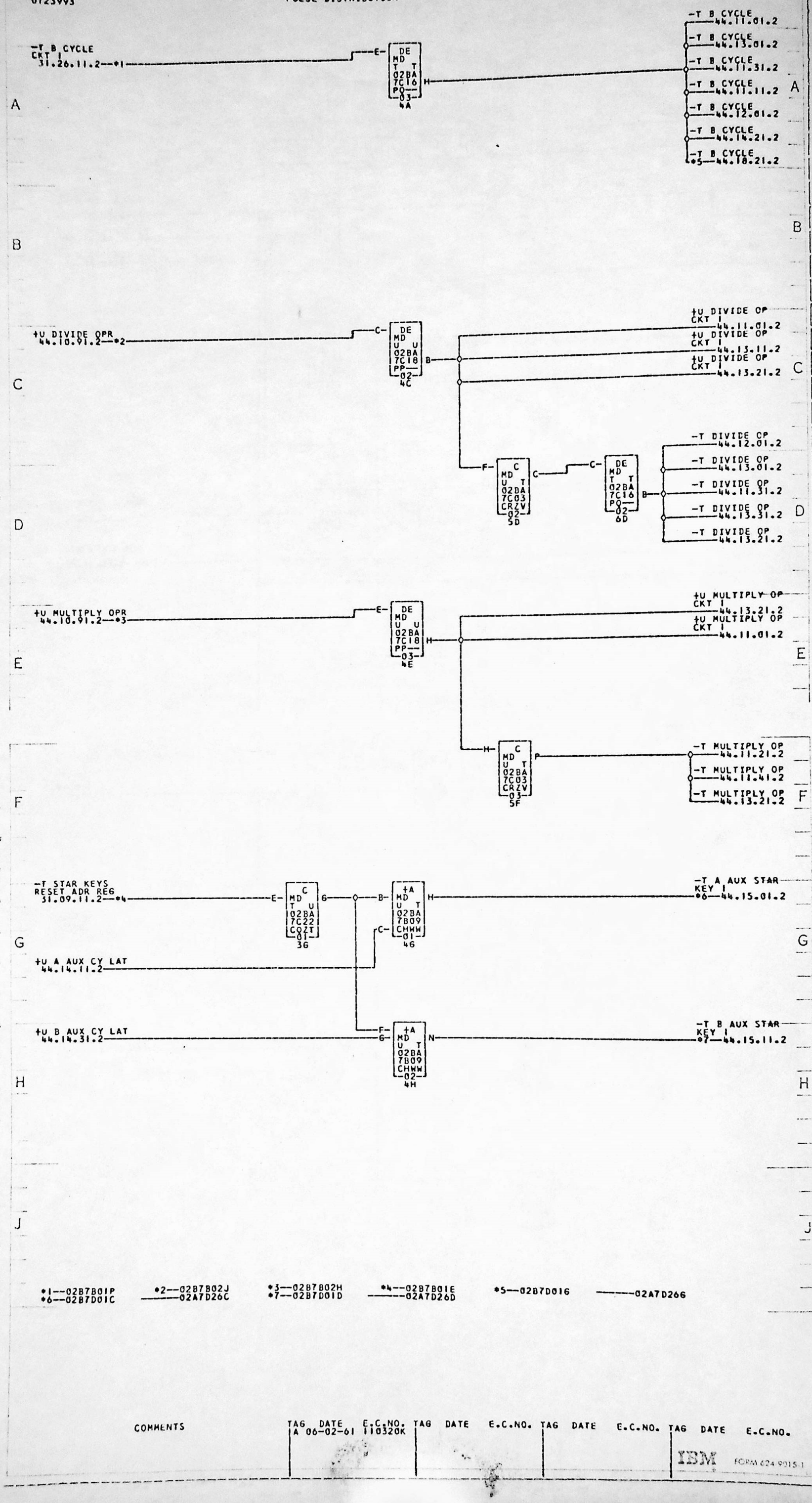


*1--02B7B01P *2--02B7B02J *3--02B7B02H *4--02B7B01E *5--02B7D016 ------02A7D266
*6--02B7D01C ------02A7D26C *7--02B7D01D ------02A7D26D

| COMMENTS | TAG | DATE | E.C.NO. | TAG | DATE | E.C.NO. | TAG | DATE | E.C.NO. | TAG | DATE | E.C.NO. |
|---|---|---|---|---|---|---|---|---|---|---|---|---|
| | A | 06-02-61 | 110320K | | | | | | | | | |

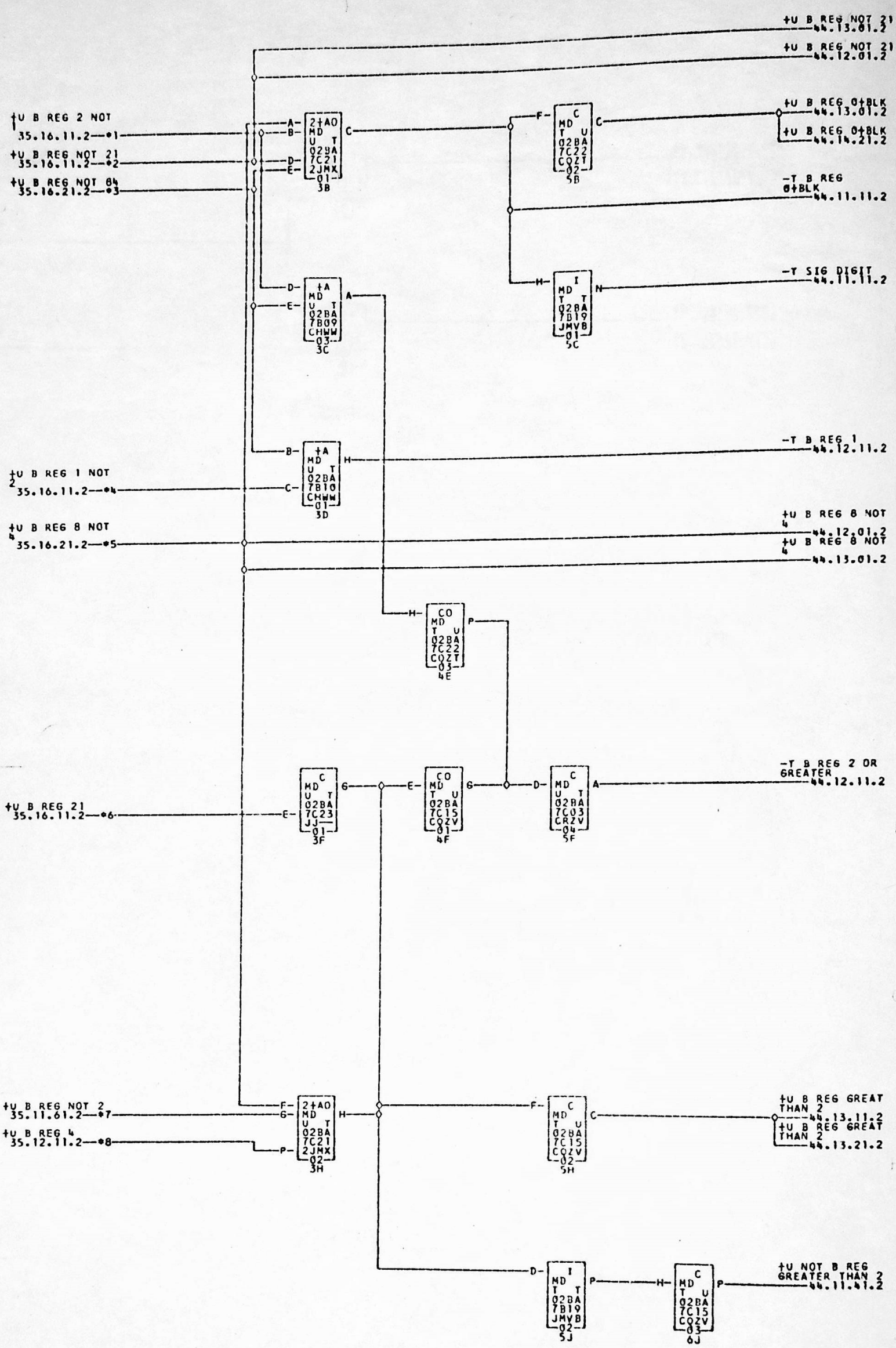


*1—02B7A02B *2—02B7A02C *3—02B7A02D *4—02B7A02E *5—02B7A02A *6—02B7A02F
*7—02B7A02G *8—02B7A02H

| COMMENTS | TAG | DATE | E.C.NO. | TAG | DATE | E.C.NO. | TAG | DATE | E.C.NO. | TAG | DATE | E.C.NO. |
|---|---|---|---|---|---|---|---|---|---|---|---|---|
| | A | 06-02-61 | 110320K | B | 12-06-61 | 113422 | | | | | | |

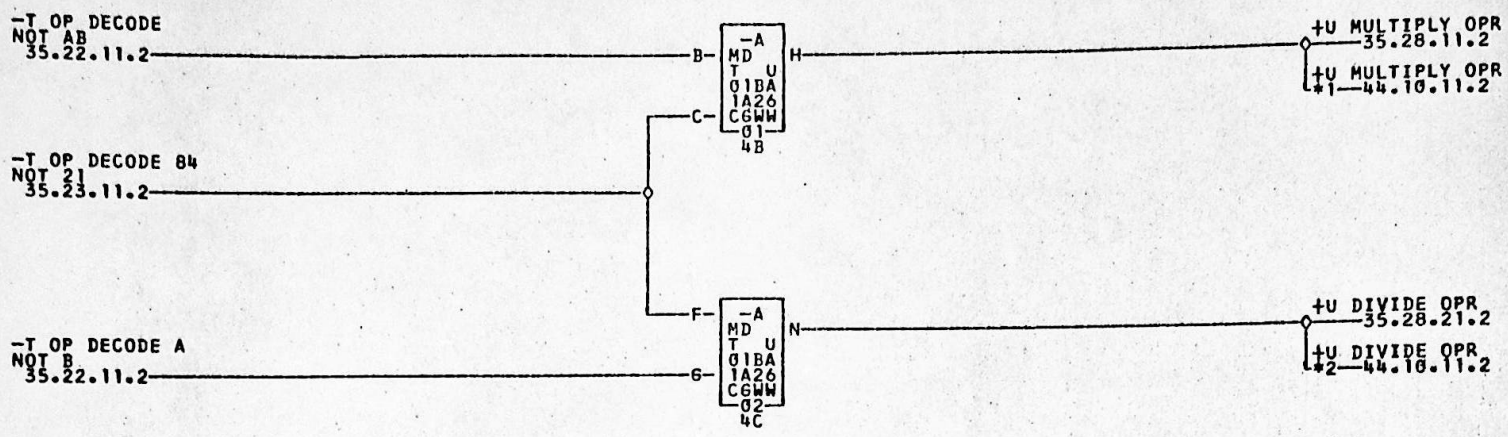


*1—01B1E02H
01B3D02J
01B3D02H
01B3B04J
01B3B04H
02A9F05E
02A9F03E
02B7B02J
02B7B02H

*2—01B1E02J

COMMENTS

| TAG | DATE | E.C.NO. | TAG | DATE | E.C.NO. | TAG | DATE | E.C.NO. | TAG | DATE | E.C.NO. |
|---|---|---|---|---|---|---|---|---|---|---|---|
| A | 06-05-61 | 110320P | B | 12-21-62 | 114052 | | | | | | |

0723995

# AUX STAJ SET LATCH

-T ARITH DIGIT GATE CKT 1
44.13.21.2

-T ADDER CARRY
34.31.15.2—*1

+U CARRY TRIG ON CALC
*6—34.31.14.2

-T NOT X POS LAT
44.11.21.2

-T TIME 060-090 CIRCUIT 1
31.12.11.2—*2

-T TIME 060-090 CIRCUIT 1
44.12.01.2

-T TIME 060-090 CIRCUIT 1
44.11.11.2

-T TIME 060-090 CIRCUIT 1
44.14.01.2

-T TIME 060-090 CIRCUIT 1
44.11.41.2

-T NOT CALC
*7—34.33.11.2

+U MULTIPLY OP CKT 1
44.10.11.2

+U NOT CALC
*8—31.06.11.2

-T CALCULATE
44.11.11.2

-T CALCULATE
44.12.11.2

-T CALCULATE
*9—44.10.21.2

+U DIVIDE OP CKT 1
44.10.11.2

+U CALCULATE
*A—31.05.21.2

-T 6WM
44.11.11.2

-T 6WM
44.11.41.2

-T 6WM
44.14.21.2

-T GATED WM
31.07.11.2—*3

-T I CYCLE
44.10.01.2

-T TRANSFER STAR DIV
*B—32.42.41.2

+U AUX STAR SET LAT
44.13.01.2

+U AUX STAR SET LAT
44.13.31.2

-T TIME 090-000
31.12.21.2—*4

-T AUX STAR SET LAT
44.11.31.2

AUX STAR

SET LAT

-T NOT AUX STAR SET LAT
44.11.11.2

-T TIME 090-000
44.12.01.2

-T TIME 090-000
44.13.31.2

-T B CYCLE
44.10.11.2

+U START RESET
37.30.31.2—*5

+U NOT START RESET
44.11.41.2

+U NOT START RESET
44.12.11.2

+U START RESET
44.14.01.2

+U START RESET
44.14.21.2

*1--02B7B02C
-----02A9E17E
-----02A9E09C
-----01B2A03B

*2--02B7C02P
------01B3B04E
------01B2A03A
*B--02B7C01L

*3--02B7B01L
*7--02B7B02B
*9--02B7C02N
-----02A7C26L

*4--02B7A02J
-----02A9E11E
-----02A7A26N

*5--02B7D02K
------01B3B04B
*A--02B7E01B

*6--02B7B02E
*8--02B7E01A
-----02A9E11C

COMMENTS

| TAG | DATE | E.C.NO. | TAG | DATE | E.C.NO. | TAG | DATE | E.C.NO. | TAG | DATE | E.C.NO. |
|---|---|---|---|---|---|---|---|---|---|---|---|
| A | 06-02-61 | 110320K | B | 06-23-61 | 110324B | | | | | | |

IBM FORM 426 9015-1

0723996

# A CYCLE ELIMINATE LATCH

1401 MD 44.11.11.2

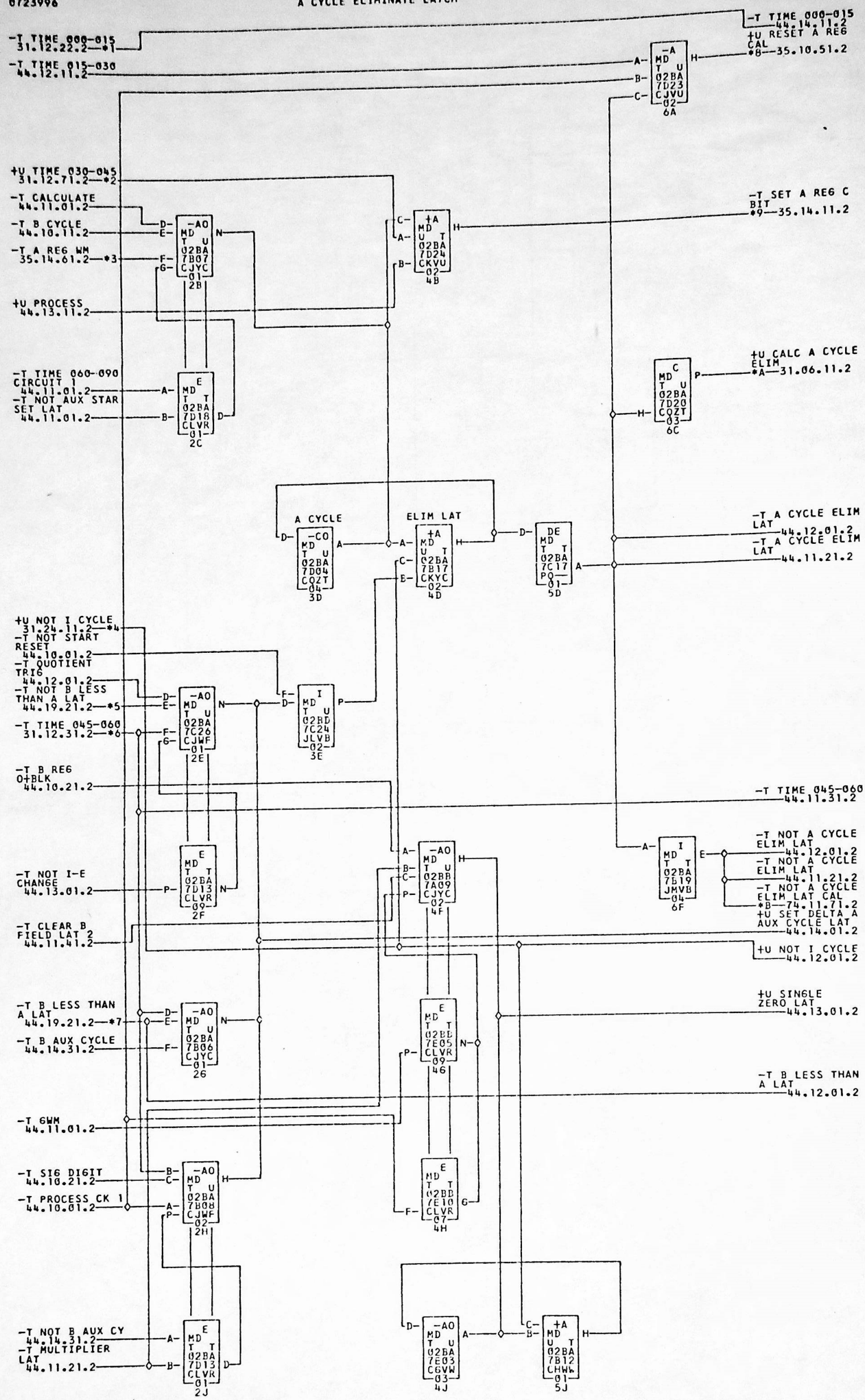


*1—02B7A02K
*2—02B7E02F
*3—02B7A02M
*4—02B7B01H
*5—02B7C026
*6—02B7A02R
*7—02B7C02F
*8—02B7A01A
*9—02A9E09B
*A—02B7E01E
*B—02B7E01R
01A3E23B
01A3E23A
01B2A03E
02A9E11B
02A9E17C
02B1C01L
02A9C13C

COMMENTS

| TAG | DATE | E.C.NO. | TAG | DATE | E.C.NO. | TAG | DATE | E.C.NO. | TAG | DATE | E.C.NO. |
|---|---|---|---|---|---|---|---|---|---|---|---|
| A | 06-02-61 | 110320K | B | 06-23-61 | 110324B | C | 07-27-61 | 110324Q | D | 06-12-62 | 114036 |
| E | 08-13-62 | 114042 | | | | | | | | | |

0723997 X POSITION LAT AND MULTIPLIER LAT 1401 MD 44.11.21.2

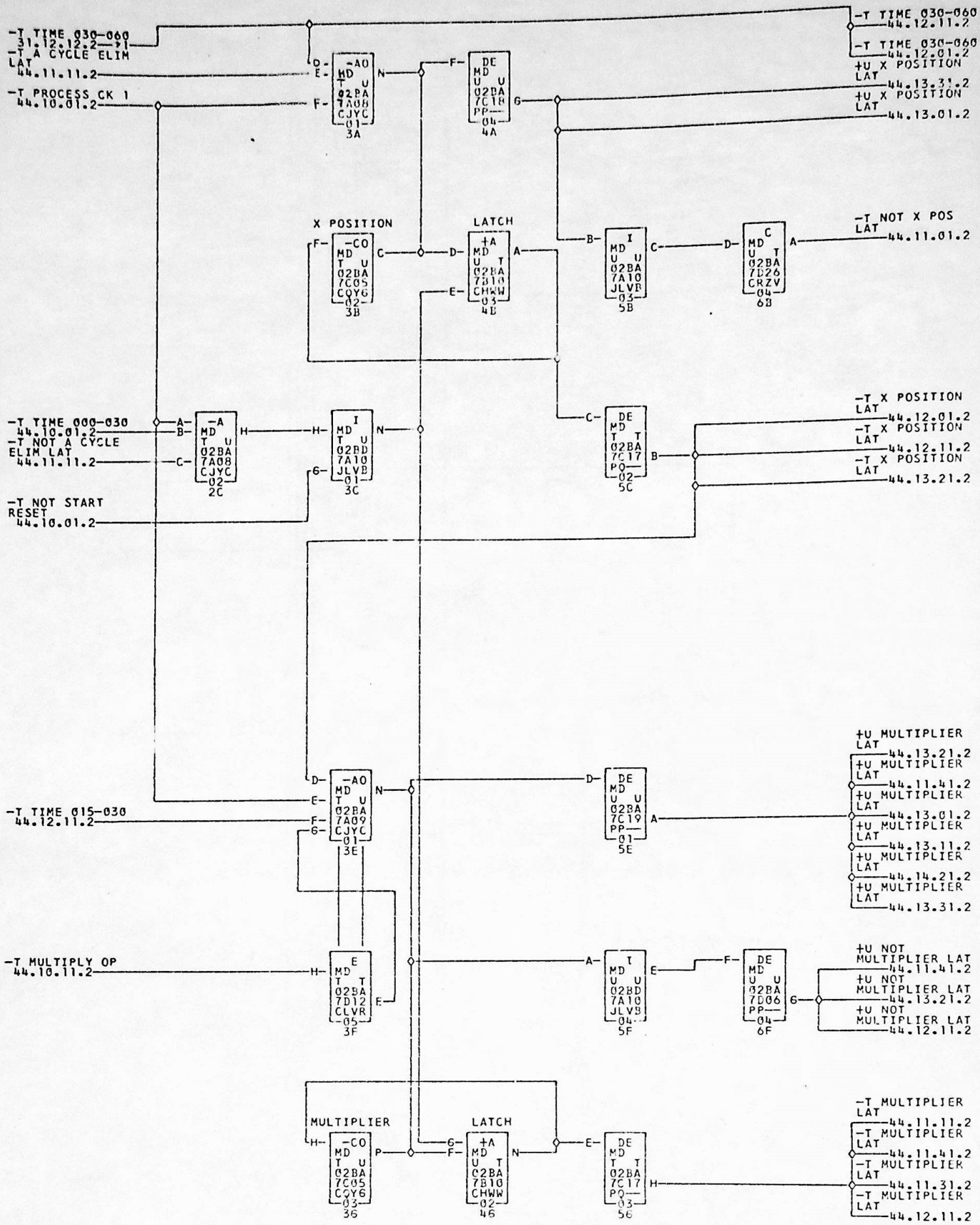


*1—02B7C02Q

COMMENTS

| TAG | DATE | E.C.NO. |
|---|---|---|
| A | 06-02-61 | 110320K |
| B | 06-23-61 | 1103248 |
| C | 07-27-61 | 1103249 |
| D | 06-12-62 | 114036 |

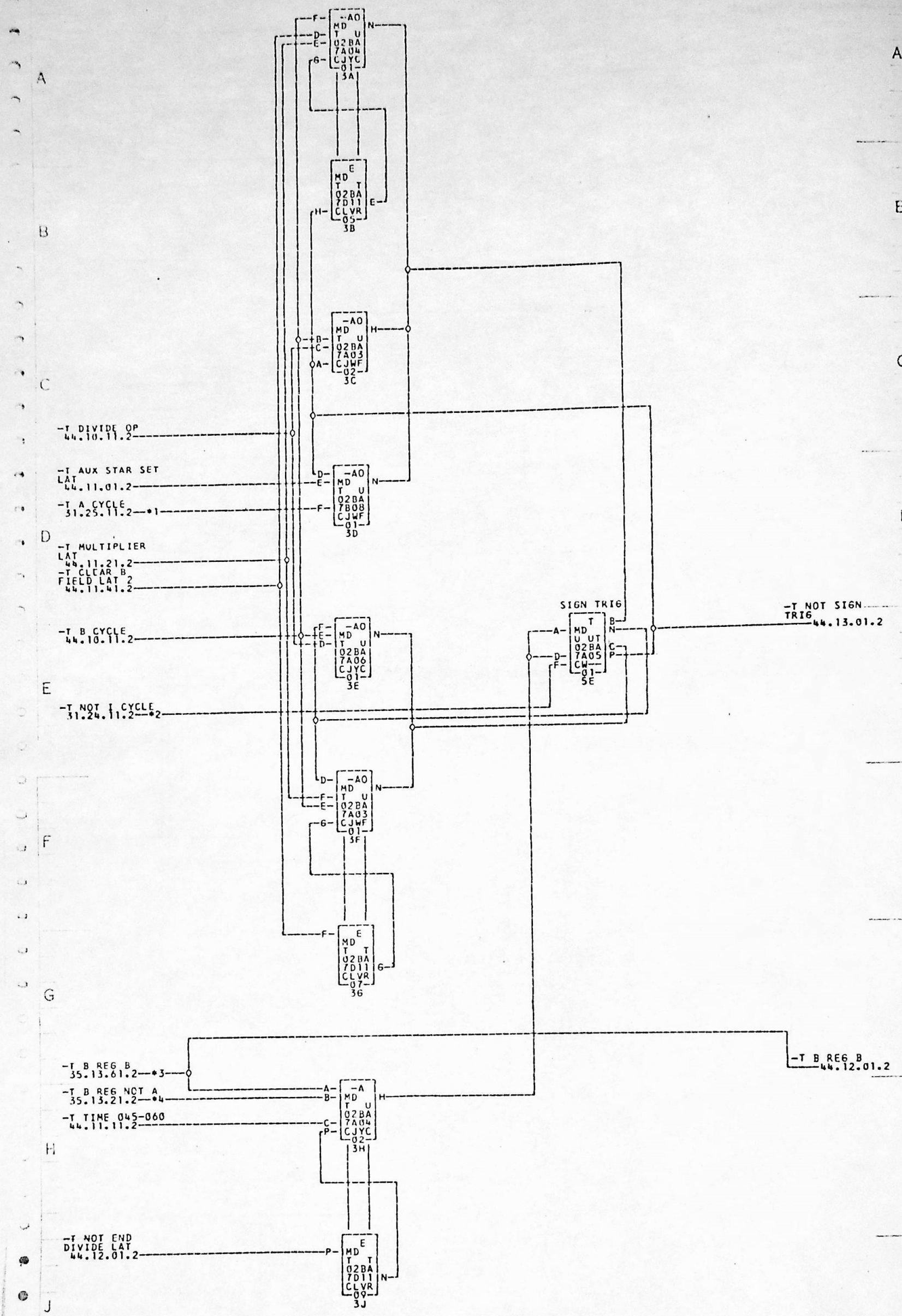


*1--02B7B01N *2--02B7E01F *3--02B7A02P *4--02B7A02Q

| COMMENTS | TAG | DATE | E.C.NO. | TAG | DATE | E.C.NO. | TAG | DATE | E.C.NO. | TAG | DATE | E.C.NO. |
|---|---|---|---|---|---|---|---|---|---|---|---|---|
| | A | 06-02-61 | 110320K | B | 06-23-61 | 110324B | | | | | | |

IBM

0723999

# CLEAR B FIELD LAT AND SET PROD LAT

1401 MD 44.11.41.2

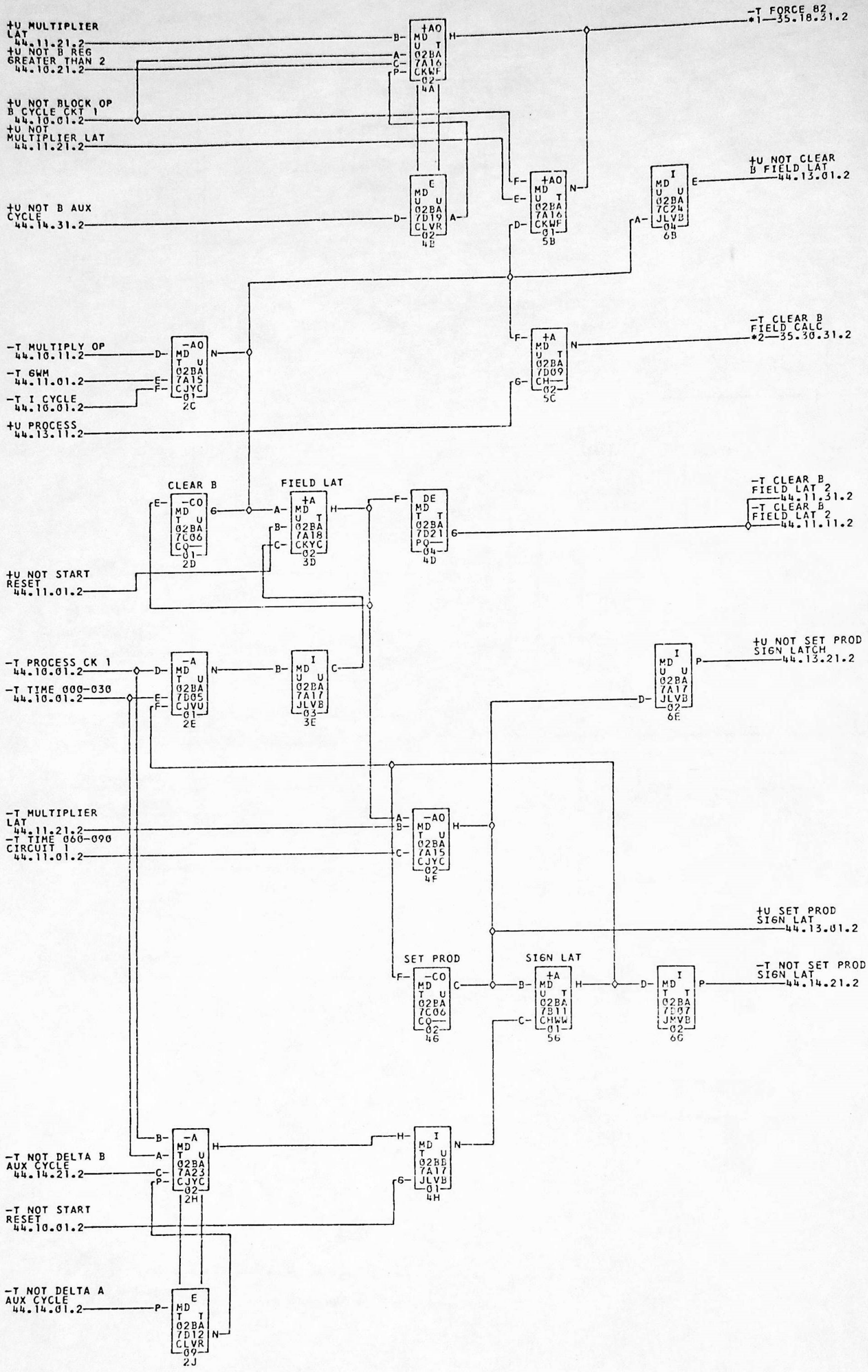


*1—02B7A01D ——02A9E15B ——01A3E23D *2—02B7B02F ——02A9E19E ——01B3B04F
——01B3E04Q ——01B6F01Q

| COMMENTS | TAG | DATE | E.C.NO. | TAG | DATE | E.C.NO. | TAG | DATE | E.C.NO. | TAG | DATE | E.C.NO. |
|---|---|---|---|---|---|---|---|---|---|---|---|---|
| | A | 06-02-61 | 110320K | B | 06-12-62 | 114036 | | | | | | |

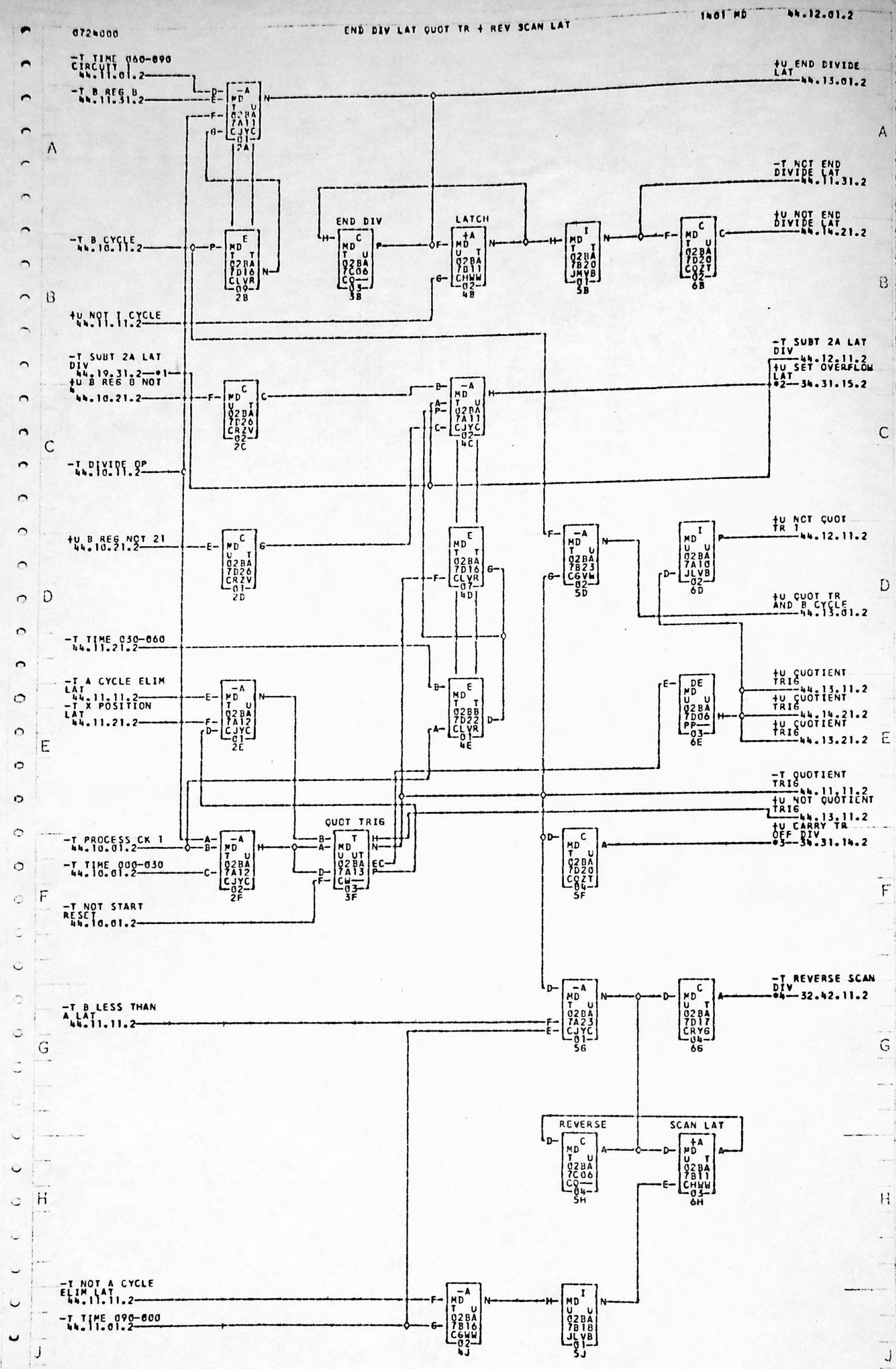


*1—02B7C02D
01B3B04L

*2—02B7B02R
*4—02B7C01J

02A9F19E
02A7C26J

01B3B04R
02A7B26L

*3—02B7B02L
01A8F26L

02A9F09E

| COMMENTS | TAG | DATE | E.C.NO. | TAG | DATE | E.C.NO. | TAG | DATE | E.C.NO. | TAG | DATE | E.C.NO. |
|---|---|---|---|---|---|---|---|---|---|---|---|---|
| | A | 06-02-61 | 1103201K | B | 07-27-61 | 1103240 | | | | | | |

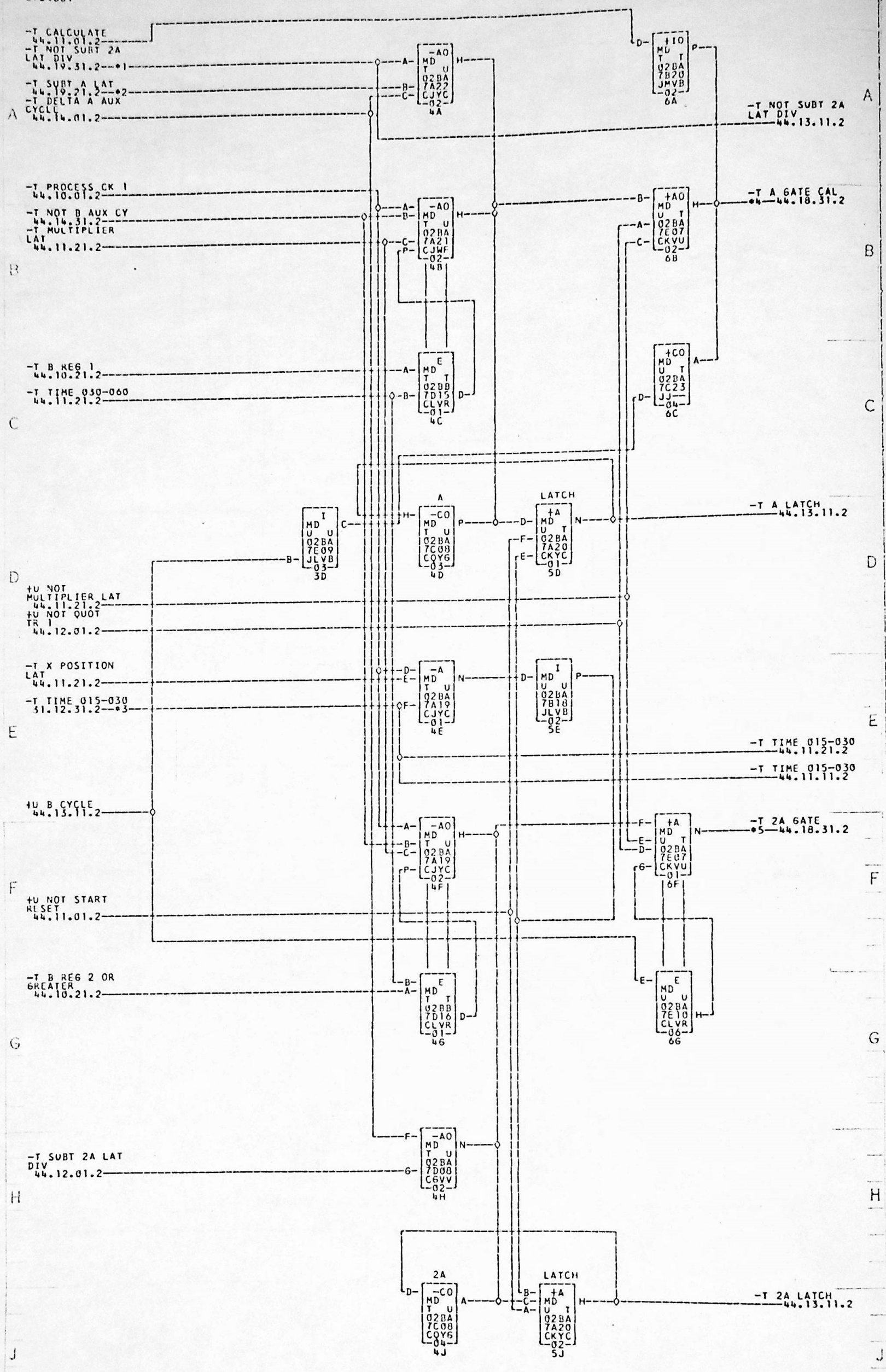


•1--02B7D01Q —————02A7D26F •2--02B7C02E •3--02B7E02E •4--02B7D01E ————02A7D26E •5--02B7D01F

| COMMENTS | TAG | DATE | E.C.NO. | TAG | DATE | E.C.NO. | TAG | DATE | E.C.NO. | TAG | DATE | E.C.NO. |
|---|---|---|---|---|---|---|---|---|---|---|---|---|
| | A | 06-02-61 | 1103201K | B | 06-23-61 | 1103248 | | | | | | |

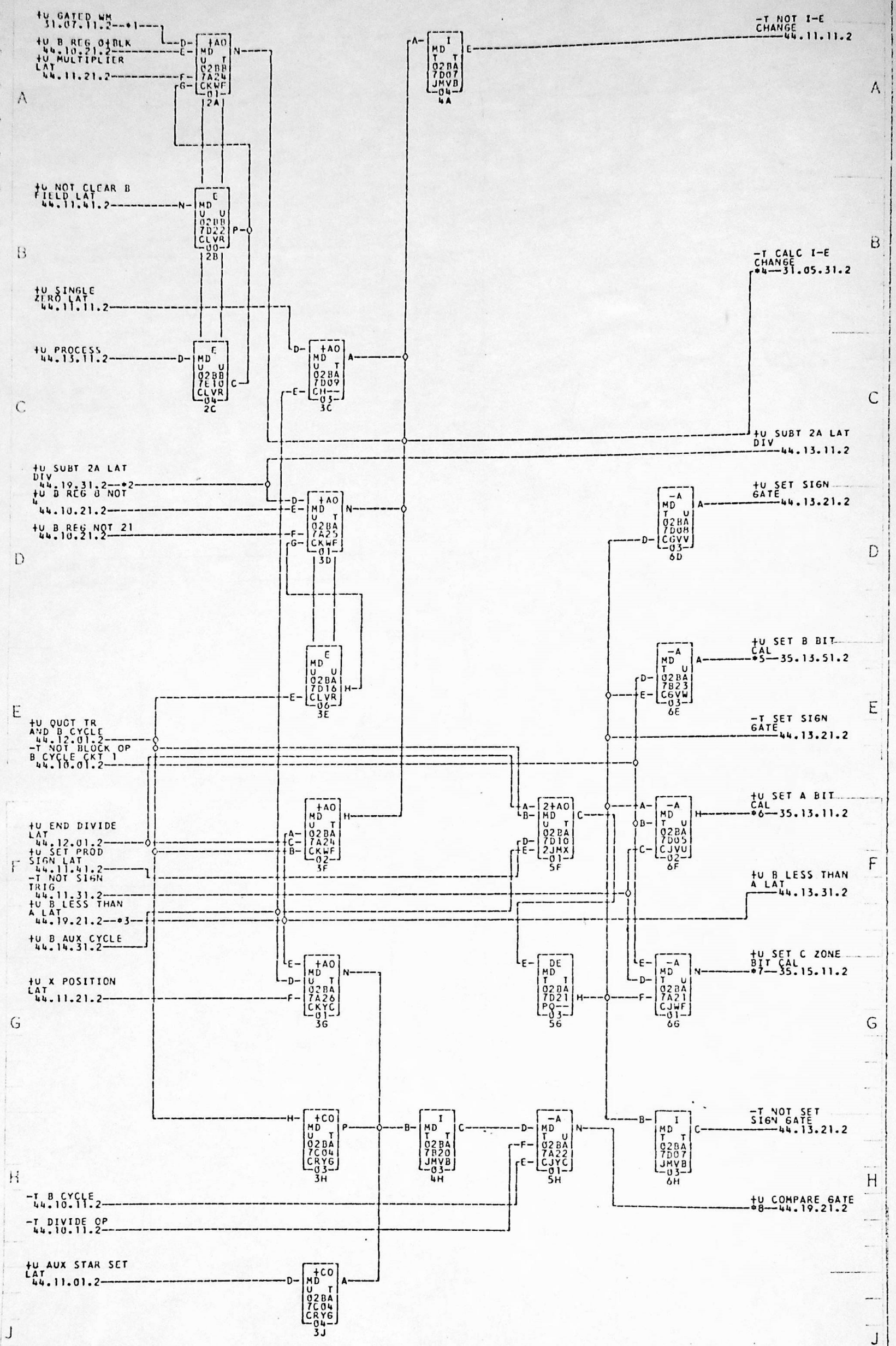


*1--02B7B01A *2--02B7C02C *3--02B7C02A *4--02B7E01C ------02A9E13C ------01B2A03C
*5--02B7A01F ------02A9E19B ------01A3F23F *6--02B7A01E ------02A9E17B ------01A3E23E
*7--02B7A01G ------02A9F01B ------01A3E23G *8--02B7C01E ------02A7C26E

| COMMENTS | TAG | DATE | E.C.NO. | TAG | DATE | E.C.NO. | TAG | DATE | E.C.NO. | TAG | DATE | E.C.NO. |
|---|---|---|---|---|---|---|---|---|---|---|---|---|
| | A | 06-02-61 | 110320K | B | 06-23-61 | 110324B | | | | | | |

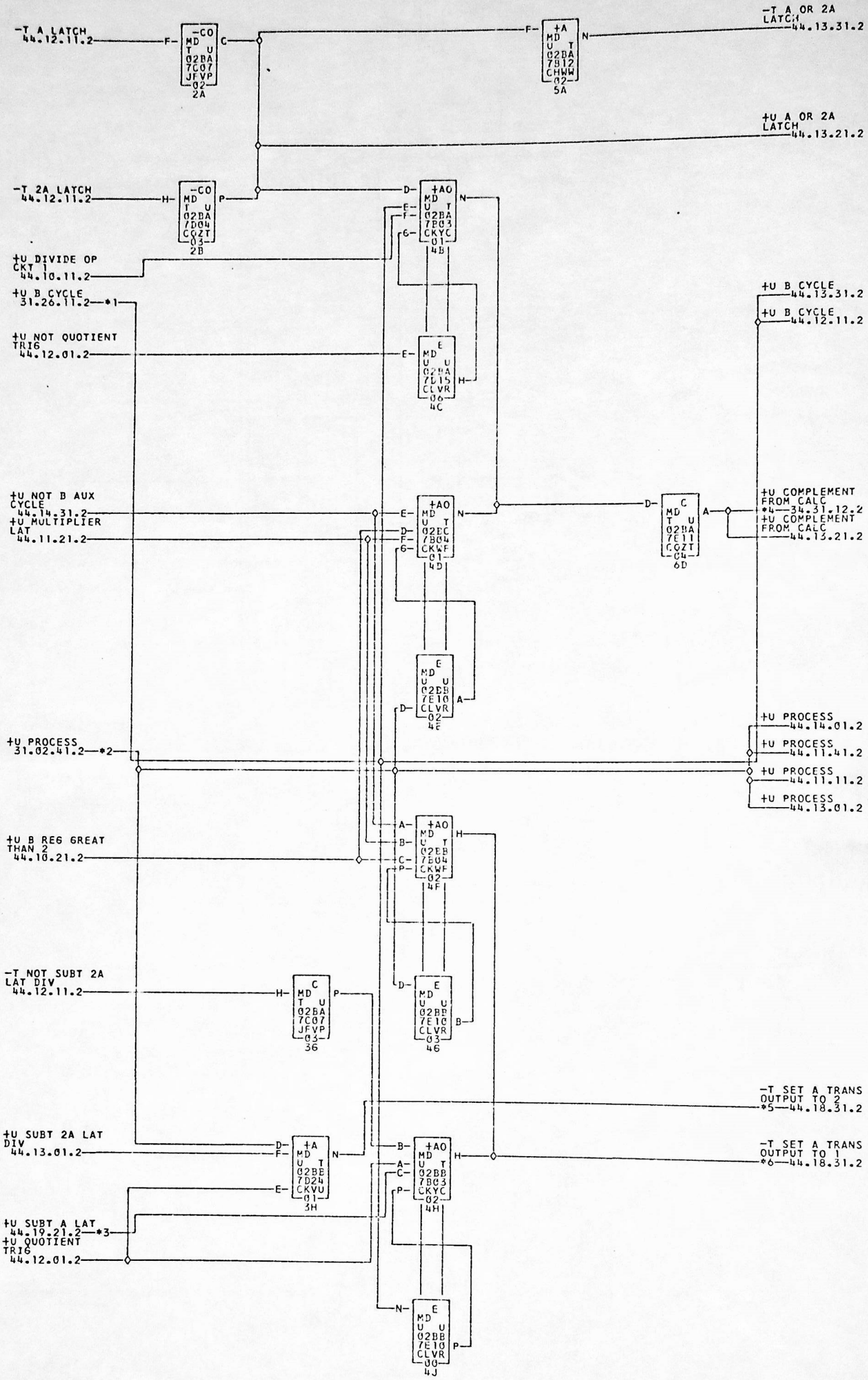


*1—02B7B01K
02A9F136

*2—02B7B01C
01B3C02N

*3—02B7C02B
*5—02E7C01Q

*4—02B7D01M
02A7C26Q

02A7D26M
*6—02B7C01P

02A7E25N
02A7C26P

COMMENTS

| TAG | DATE | E.C.NO. | TAG | DATE | E.C.NO. | TAG | DATE | E.C.NO. | TAG | DATE | E.C.NO. |
|---|---|---|---|---|---|---|---|---|---|---|---|
| A | 06-02-61 | 110320K | B | 06-23-61 | 110324B | C | 07-27-61 | 1103249 | D | 06-12-62 | 114036 |

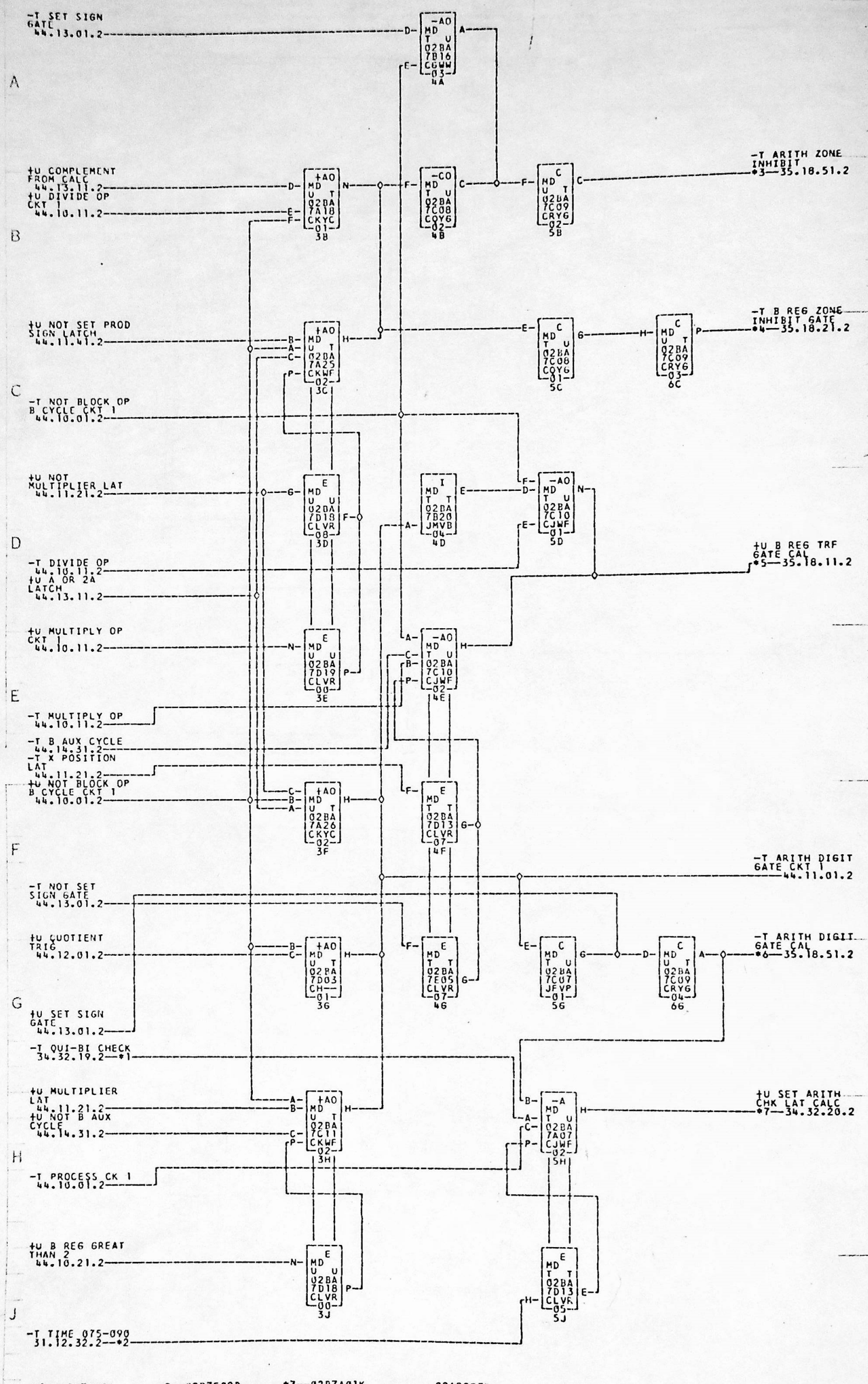


| COMMENTS | TAG | DATE | E.C.NO. | TAG | DATE | E.C.NO. | TAG | DATE | E.C.NO. | TAG | DATE | E.C.NO. |
|---|---|---|---|---|---|---|---|---|---|---|---|---|
| | A | 06-02-61 | 1103201K | B | 06-23-61 | 1103248 | | | | | | |

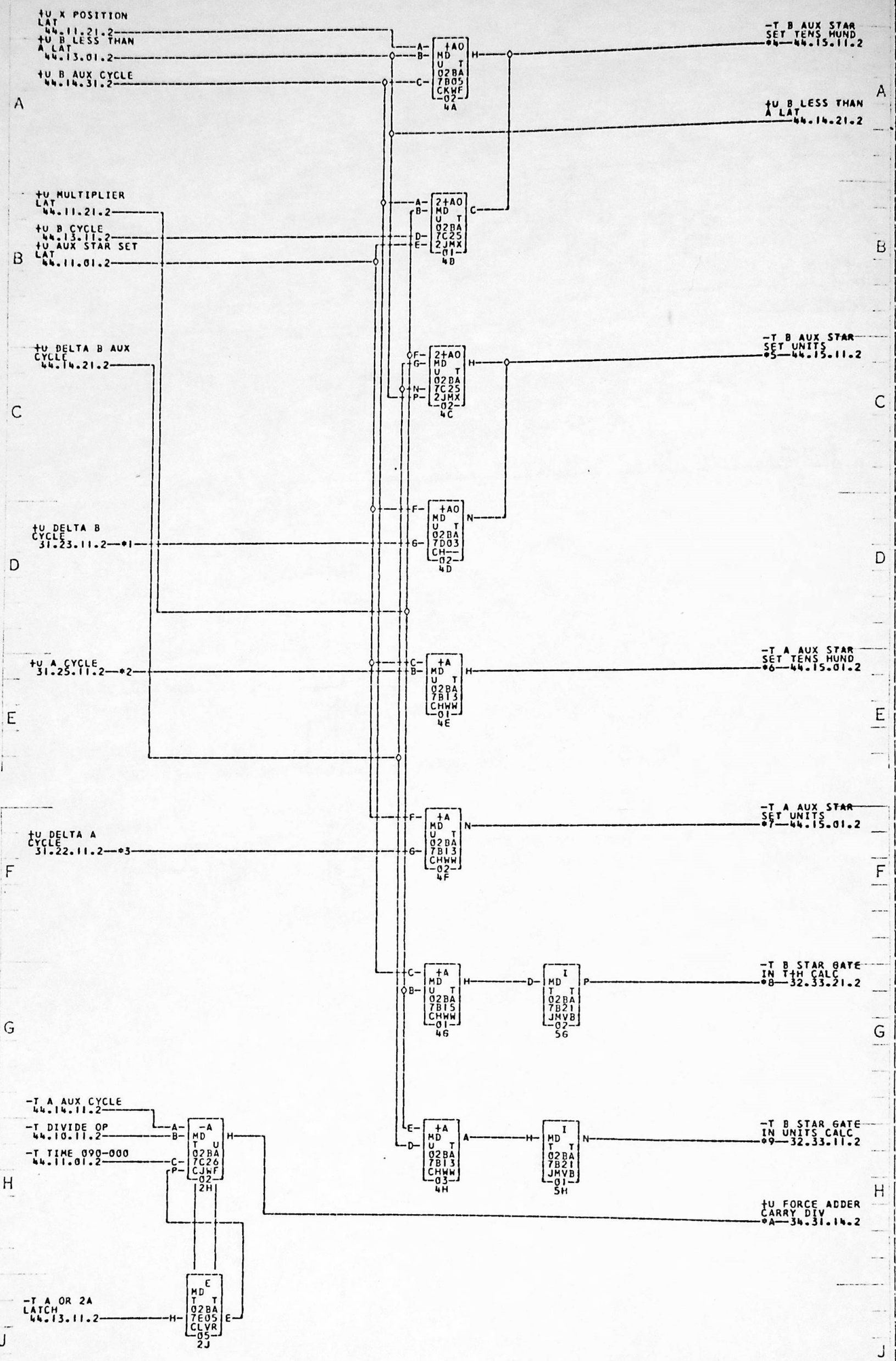


| COMMENTS | TAG | DATE | E.C.NO. | TAG | DATE | E.C.NO. | TAG | DATE | E.C.NO. | TAG | DATE | E.C.NO. |
|---|---|---|---|---|---|---|---|---|---|---|---|---|
| | A | 06-02-61 | 110320K | | | | | | | | | |

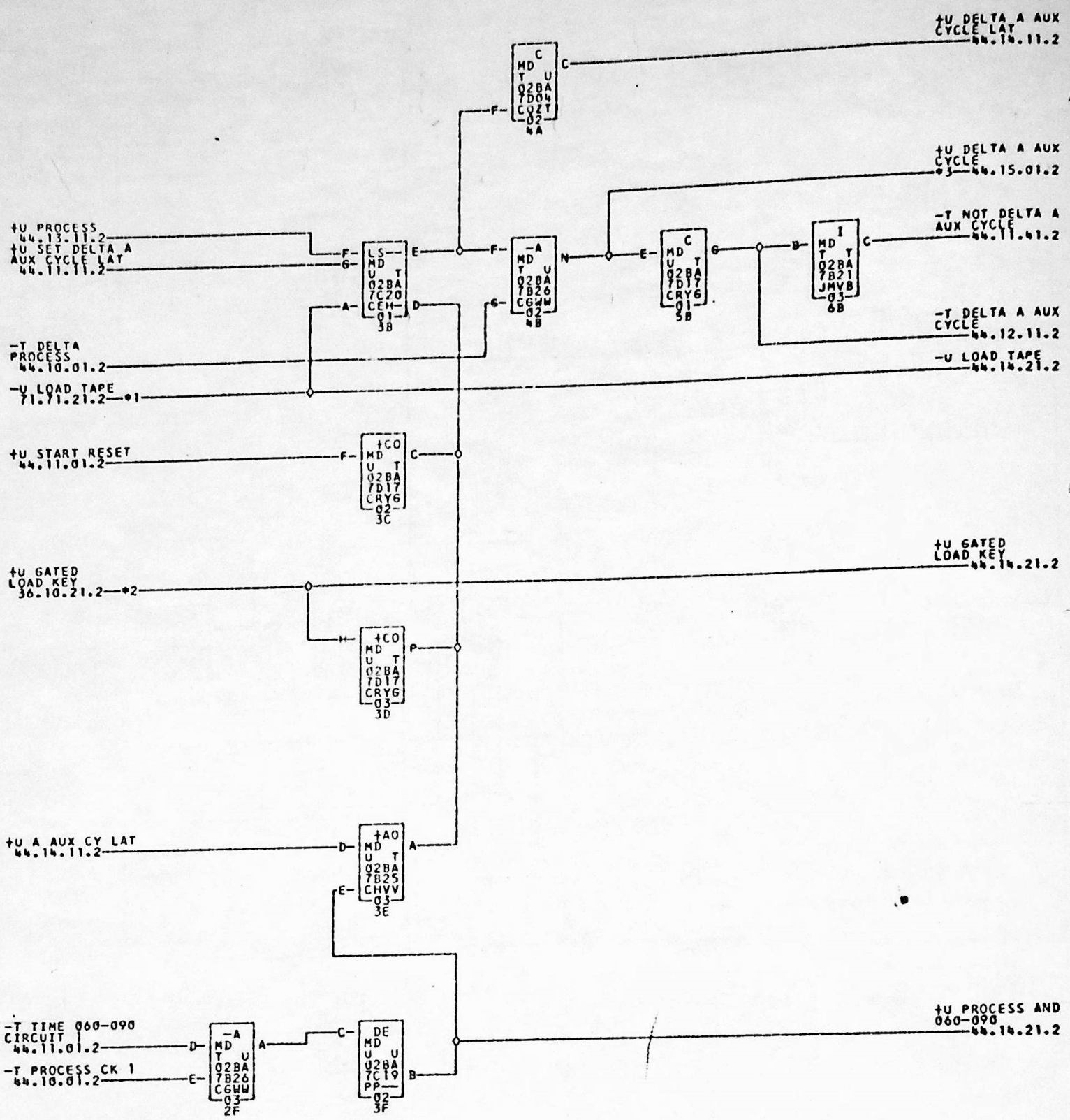


*1—02B7E01P *2—02B7E01Q *3—02B7C01A ———02A7C26A

| COMMENTS | TAG | DATE | E.C.NO. | TAG | DATE | E.C.NO. | TAG | DATE | E.C.NO. | TAG | DATE | E.C.NO. |
|---|---|---|---|---|---|---|---|---|---|---|---|---|
| | A | 06-02-61 | 110320K | B | 12-06-61 | 113422 | | | | | | |

0724007

# A AUX CYCLE LATCH

-T DELTA PROCESS 44.10.01.2
-T TIME 000-030 44.10.01.2
+U DELTA A AUX CYCLE LAT 44.14.01.2
-T A AUX STAR KEY 2 37.10.11.2—*1
-T TIME 000-015 44.11.11.2
-T NOT B AUX STAR KEY 2 CK 2 44.14.31.2
-T NOT I STAR KEY 2 31.24.11.2—*2
-T NOT A STAR KEY 2 31.25.11.2—*3
-T NOT B STAR KEY 2 31.26.11.2—*4
+U NOT STORAGE SCAN 37.30.12.2—*5
+U NOT STORAGE PRINT OUT 37.30.11.2—*6
+U GATE CYCLE OUTPUT 31.24.11.2—*7

-A MD T U 02BA 7B23 C6VW -01- 2A
+AO MD U T 02BA 7B25 CHVV -01- 3A
E MD T T 02BA 7D10 CLVR -05- 3B
I MD T T 02BA 7B21 JMVB -04- 6A
I MD T T 02BA 7B22 JMVB -01- 6B
-A MD T U 02BA 7B26 C6WW -01- 2C
I MD U U 02BA 7B18 JLVB -03- 2D
+AO MD U T 02BA 7B25 CHVV -02- 3D
-A MD T U 02BA 7B07 CJYC -02- 4D
E MD T T 02BA 7D11 CLVR -01- 4E
+A MD U T 02BA 7B15 CHWW -02- 3F
C MD U T 02BA 7C09 CRYG -01- 5C
DI MD T V 02BA 7C13 KA-- -03- 6C
DI MD T V 02BA 7C13 KA-- -04- 6D
DE MD T T 02BA 7D21 PO-- -02- 6F
DE MD U U 02BA 7D06 PP-- -01- 46
+A MD U T 02BA 7B15 CHWW -03- 56
C MD T U 02BA 7D20 COZT -01- 66

+U DELT PRO AND TIME 000-030 44.14.31.2
-T NOT A AUX STAR KEY 2 CK 1 *8—31.25.11.2
-T NOT A AUX STAR KEY 2 CK 2 44.14.31.2
+U NOT DELT PRO AND 000-015 44.14.31.2
+U A AUX LT A *9—37.20.11.2
+U A AUX LT C *A—37.20.11.2
+U A AUX CY LAT 44.14.01.2
+U A AUX CY LAT 44.10.11.2
-T NOT I STAR KEY 2 44.14.31.2
-T NOT A STAR KEY 2 44.14.31.2
-T NOT B STAR KEY 2 44.14.31.2
-T NOT STORAGE SCAN OR PRT OUT 44.14.31.2
-T A AUX CYCLE *B—44.15.01.2
-T A AUX CYCLE 44.13.31.2
+U A AUX CYCLE 44.14.21.2
+U GATE CYCLE OUTPUT 44.14.31.2

A AUX CY LAT

*1--02B7D02A
*2--02B7E01L
*3--02B7E01J
*4--02B7E01K
*5--02B7D02J
*6--02B7D02H
*7--02B7E01H —— 01A2A14C
*8--02B7B01Q
*A--02B7D02D —— 02A9E15A
—— 02A9E17D
—— 01B2B03Q —— 01A2A14D
*9--02B7D02C —— 02A9E13A
*B--02B7C01B —— 02A7C26B

| COMMENTS | TAG | DATE | E.C.NO. | TAG | DATE | E.C.NO. | TAG | DATE | E.C.NO. | TAG | DATE | E.C.NO. |
|---|---|---|---|---|---|---|---|---|---|---|---|---|
| | A | 06-02-61 | 110320K | B | 06-23-61 | 110324B | | | | | | |

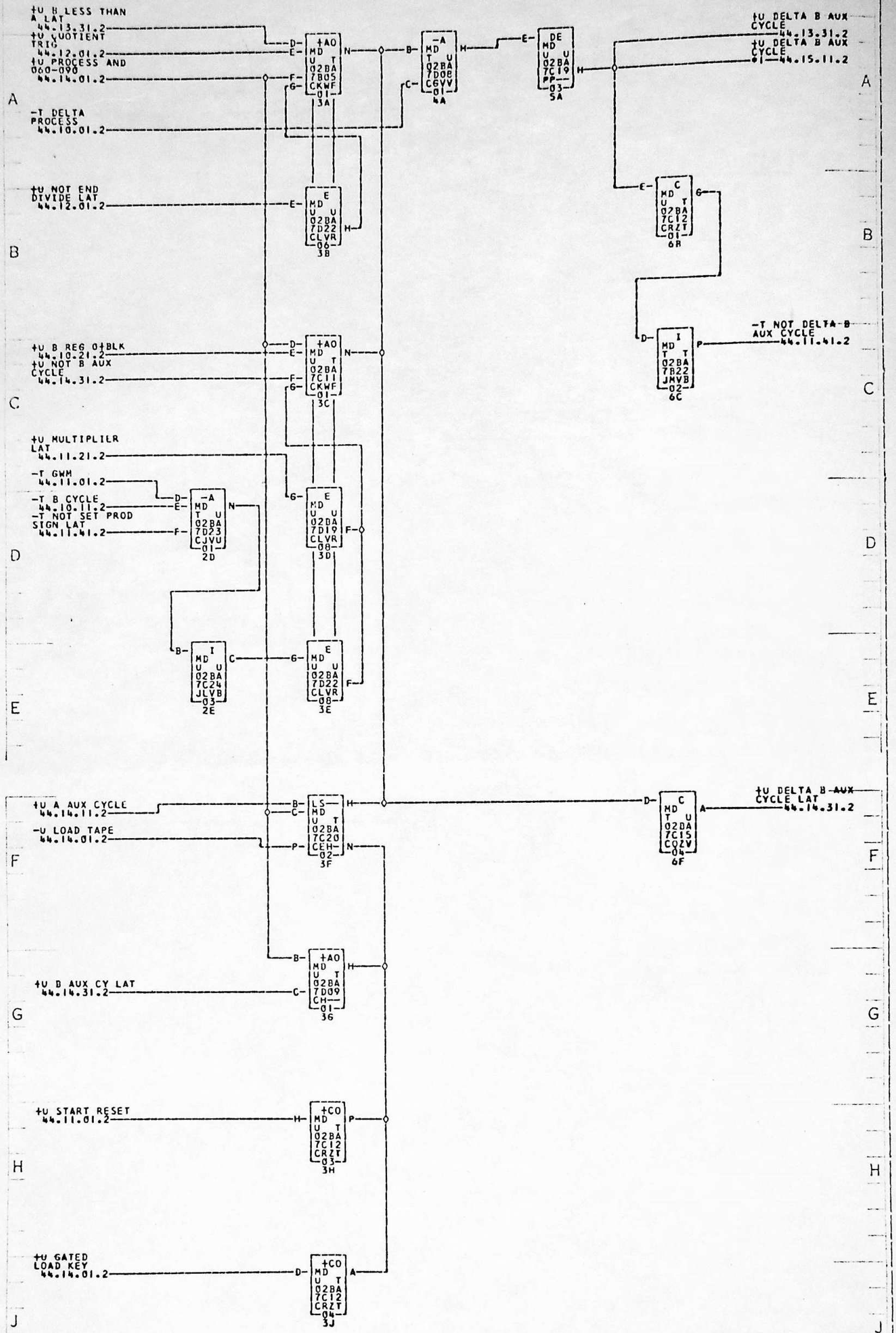


| COMMENTS | TAG | DATE | E.C.NO. | TAG | DATE | E.C.NO. | TAG | DATE | E.C.NO. | TAG | DATE | E.C.NO. |
|---|---|---|---|---|---|---|---|---|---|---|---|---|
| | A | 06-02-61 | 110320K | | | | | | | | | |

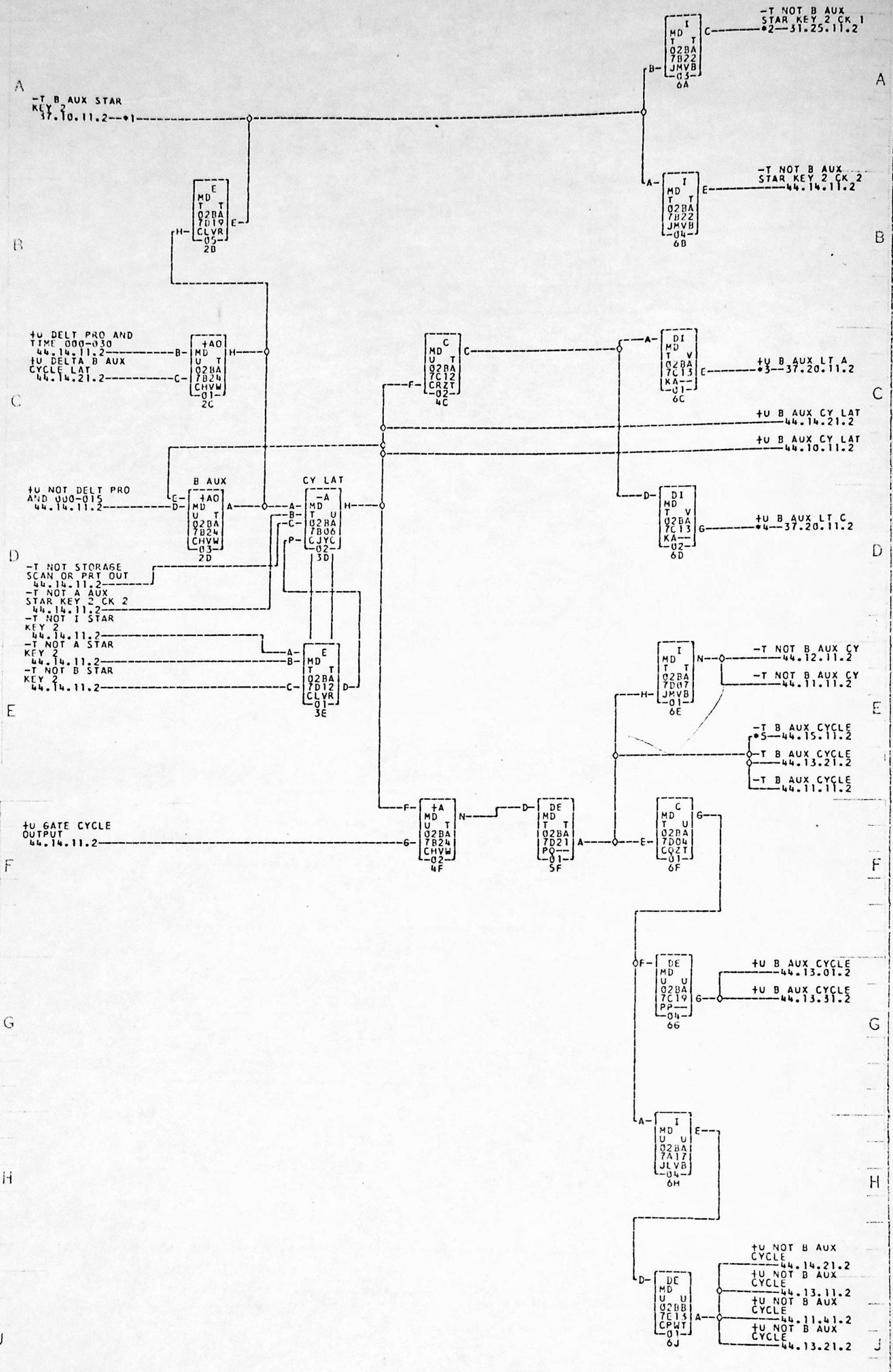


*1--02B7D02B -----01A2A14E
*2--02B7B01R *4--02B7D02F
------02A9F19D ------02A9E19A
------01B2B03R ------01A2A14F
*3--02B7D02E *5--02B7C01D
------02A9E17A ------02A7C26D

COMMENTS

| TAG | DATE | E.C.NO. |
|---|---|---|
| A | 06-02-61 | 1103208 |
| B | 06-23-61 | 1103248 |

IBM FORM 824 9015

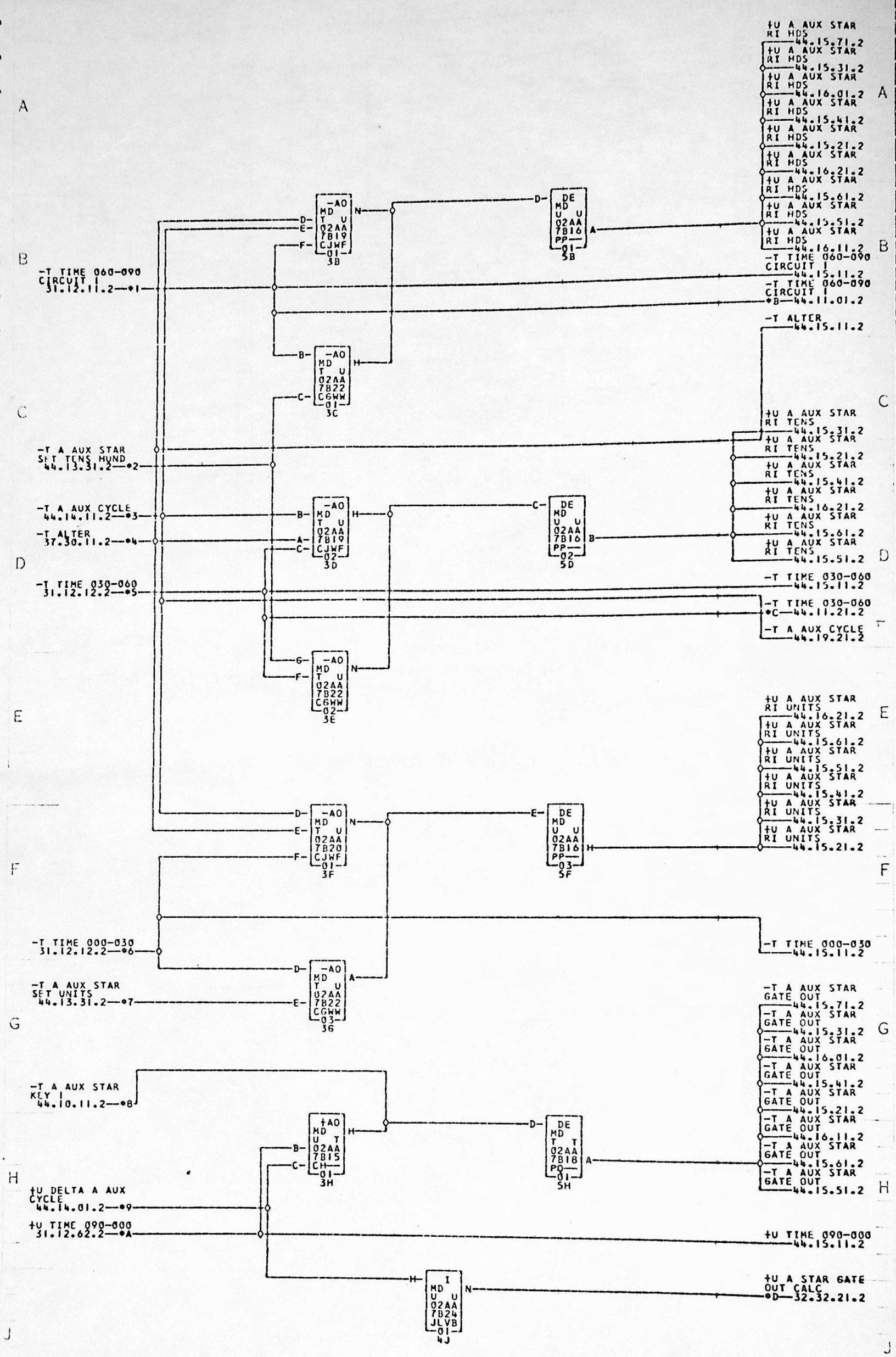


*1—02A7E25M *2—02A7C26F *3—02A7C26B *4—02A7A26K *5—02A7E26R *6—02A7A26R
*7—02A7C26K *8—02A7D26C *9—02A7C26A *A—02A7E25L *B—02A7A26P *C—02A7A26Q
*D—02A7C266 —02B7C01G —02B7D02N —02A9D03F —01A8A25B —01A8A26M
—01A7A23H

| COMMENTS | TAG | DATE | E.C.NO. | TAG | DATE | E.C.NO. | TAG | DATE | E.C.NO. | TAG | DATE | E.C.NO. |
|---|---|---|---|---|---|---|---|---|---|---|---|---|
| | A | 05-31-61 | 1103203 | | | | | | | | | |

1401 MD 44.15.11.2

B AUX STAR GATE IN AND OUT CONTROLS

-AO MD T U 02AA 7B23 CGWW 01 3A

-AO MD T U 02AA 7B20 CJWF 02 3B

-AO MD T U 02AA 7B23 CGWW 02 3C

-AO MD T U 02AA 7B21 CJWF 01 3D

-AO MD T U 02AA 7B21 CJWF 02 3E

-AO MD T U 02AA 7B23 CGWW 03 3F

+AO MD U T 02AA 7C01 CHVW 03 3G

I MD U U 02AA 7B24 JLVB 02 4H

DE MD U U 02AA 7B16 PP 04 5A

DE MD U U 02AA 7B17 PP 01 5C

DE MD U U 02AA 7B17 PP 02 5E

DE MD T T 02AA 7B18 PQ 02 5G

+U B AUX STAR RI HDS 44.16.31.2
+U B AUX STAR RI HDS 44.15.61.2
+U B AUX STAR RI HDS 44.15.51.2
+U B AUX STAR RI HDS 44.16.11.2
+U B AUX STAR RI HDS 44.15.21.2
+U B AUX STAR RI HDS 44.15.41.2
+U B AUX STAR RI HDS 44.16.01.2
+U B AUX STAR RI HDS 44.15.31.2
+U B AUX STAR RI HDS 44.15.71.2

+U B AUX STAR RI TENS 44.16.31.2
+U B AUX STAR RI TENS 44.15.61.2
+U B AUX STAR RI TENS 44.15.51.2
+U B AUX STAR RI TENS 44.15.21.2
+U B AUX STAR RI TENS 44.15.41.2
+U B AUX STAR RI TENS 44.15.31.2

+U B AUX STAR RI UNITS 44.16.31.2
+U B AUX STAR RI UNITS 44.15.61.2
+U B AUX STAR RI UNITS 44.15.51.2
+U B AUX STAR RI UNITS 44.15.41.2
+U B AUX STAR RI UNITS 44.15.31.2
+U B AUX STAR RI UNITS 44.15.21.2

-T TIME 000-030 44.15.01.2

-T B AUX STAR SET UNITS 44.13.31.2 —*3

-T B AUX STAR KEY I 44.16.11.2 —*4

+U TIME 090-000 44.15.01.2

+U DELTA B AUX CYCLE 44.14.21.2 —*5

-T B AUX STAR GATE OUT 44.15.71.2
-T B AUX STAR GATE OUT 44.15.31.2
-T B AUX STAR GATE OUT 44.16.01.2
-T B AUX STAR GATE OUT 44.15.41.2
-T B AUX STAR GATE OUT 44.15.21.2
-T B AUX STAR GATE OUT 44.16.11.2
-T B AUX STAR GATE OUT 44.15.61.2
-T B AUX STAR GATE OUT 44.15.51.2

+U B STAR GATE OUT CALC —*6 32.33.31.2

*1—02A7C26M —02B7C01H
*2—02A7C26D —02B7D02P
*3—02A7C26N —02A9D05F
*4—02A7D26D —01A8A25C
*5—02A7C26C —01A8A26J
*6—02A7C26H —01A7A23J

| COMMENTS | TAG | DATE | E.C.NO. | TAG | DATE | E.C.NO. | TAG | DATE | E.C.NO. | TAG | DATE | E.C.NO. |
|---|---|---|---|---|---|---|---|---|---|---|---|---|
| | A | 05-31-61 | 110320J | | | | | | | | | |

# B AUX STAR GATE IN AND OUT CONTROLS



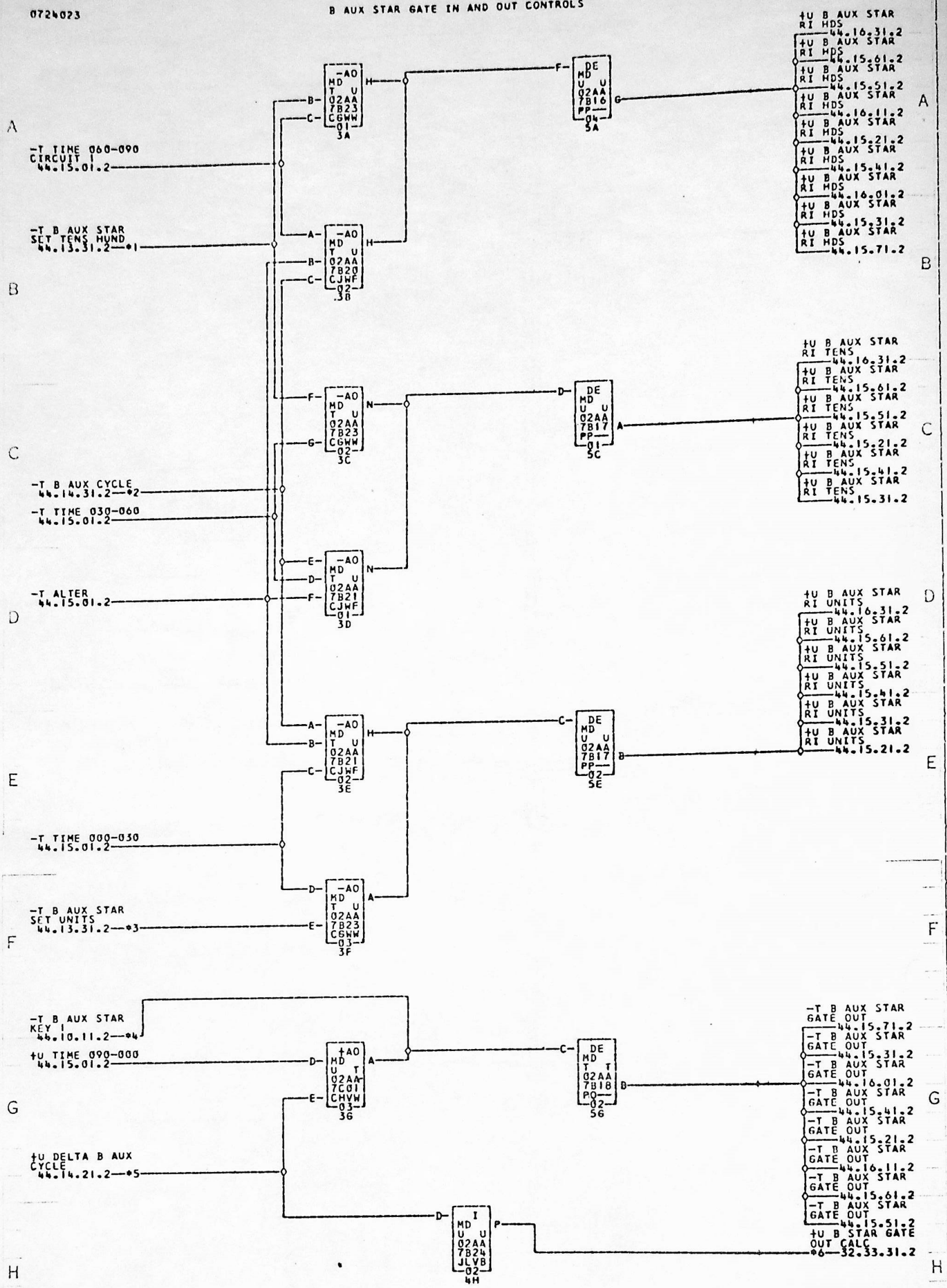


*1—02A7C26M
——02B7C01H

*2—02A7C26D
——02B7D02P

*3—02A7C26N
——02A9D05F

*4—02A7D26D
——01A8A25C

*5—02A7C26C
——01A8A26J

*6—02A7C26H
——01A7A23J

| COMMENTS | TAG | DATE | E.C.NO. | TAG | DATE | E.C.NO. | TAG | DATE | E.C.NO. | TAG | DATE | E.C.NO. |
|---|---|---|---|---|---|---|---|---|---|---|---|---|
| | A | 05-31-61 | 110320J | | | | | | | | | |

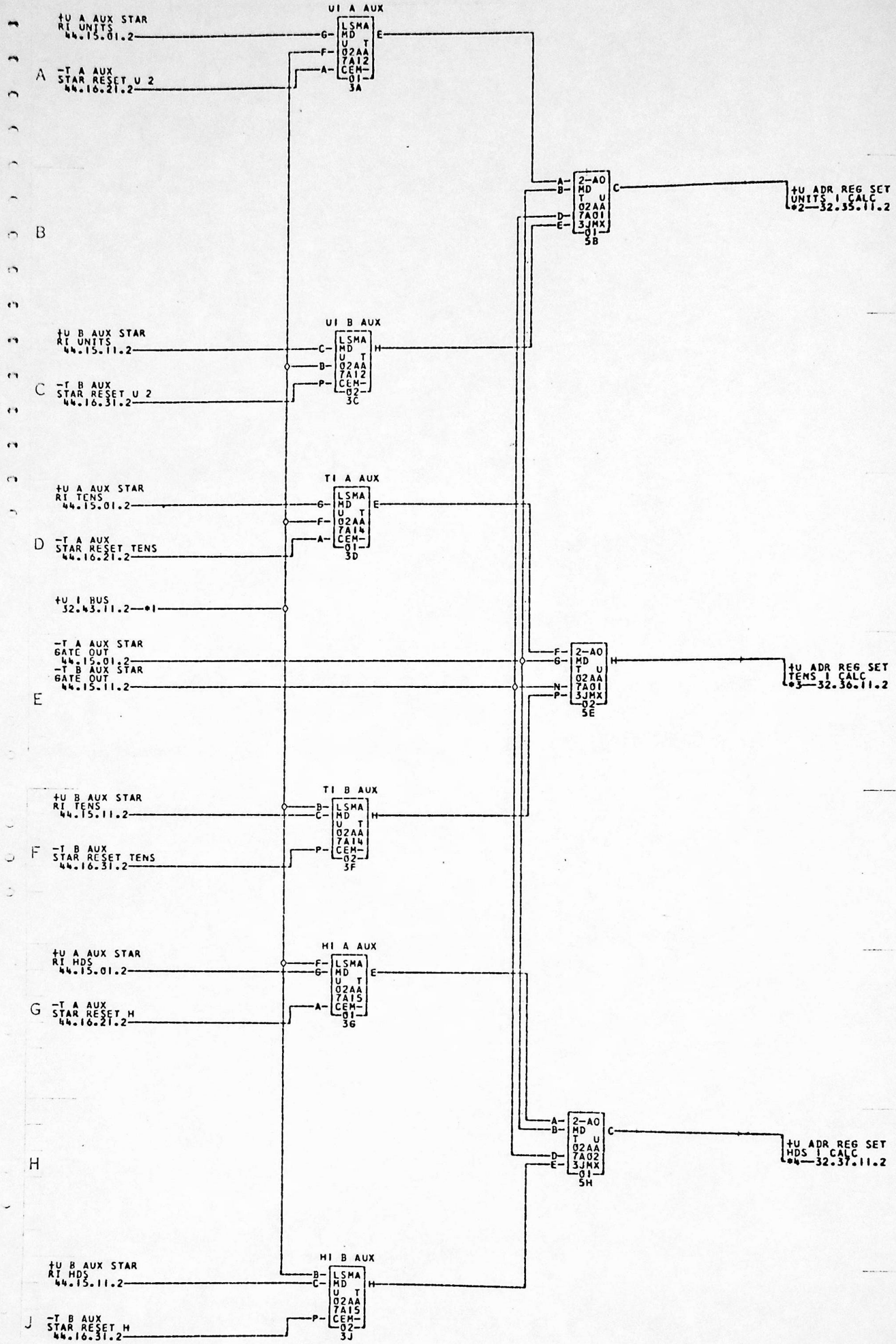


*1—02A7B26F ——01A7A24F
*2—02A7A25A ——02A9B01A ——01A7A24A
*4—02A7A25L ——01A7A24L
*3—02A7A25F ——02A9B11A

| COMMENTS | TAG | DATE | E.C.NO. | TAG | DATE | E.C.NO. | TAG | DATE | E.C.NO. | TAG | DATE | E.C.NO. |
|---|---|---|---|---|---|---|---|---|---|---|---|---|
| | A | 05-31-61 | 110320J | | | | | | | | | |

0724024 AUX STAR I CTRL UNITS TENS HDS 1401 MD 44.15.21.2

+U A AUX STAR RI UNITS 44.15.01.2
-T A AUX STAR RESET U 2 44.16.21.2
UI A AUX 3A
+U B AUX STAR RI UNITS 44.15.11.2
-T B AUX STAR RESET U 2 44.16.31.2
UI B AUX 3C
+U A AUX STAR RI TENS 44.15.01.2
-T A AUX STAR RESET TENS 44.16.21.2
TI A AUX 3D
+U I BUS 32.43.11.2 *1
-T A AUX STAR GATE OUT 44.15.01.2
-T B AUX STAR GATE OUT 44.15.11.2
+U B AUX STAR RI TENS 44.15.11.2
-T B AUX STAR RESET TENS 44.16.31.2
TI B AUX 3F
+U A AUX STAR RI HDS 44.15.01.2
-T A AUX STAR RESET H 44.16.21.2
HI A AUX 3G
+U B AUX STAR RI HDS 44.15.11.2
-T B AUX STAR RESET H 44.16.31.2
HI B AUX 3J
5B +U ADR REG SET UNITS I CALC *2 32.35.11.2
5E +U ADR REG SET TENS I CALC *3 32.36.11.2
5H +U ADR REG SET HDS I CALC *4 32.37.11.2

*1 02A7B26F 01A7A24F
*2 02A7A25A 02A9B01A 01A7A24L 01A7A24A
*3 02A7A25F 02A9B11A
*4 02A7A25L 01A7A24L

| COMMENTS | TAG | DATE | E.C.NO. | TAG | DATE | E.C.NO. | TAG | DATE | E.C.NO. | TAG | DATE | E.C.NO. |
|---|---|---|---|---|---|---|---|---|---|---|---|---|
| | A | 05-31-61 | 110320J | | | | | | | | | |

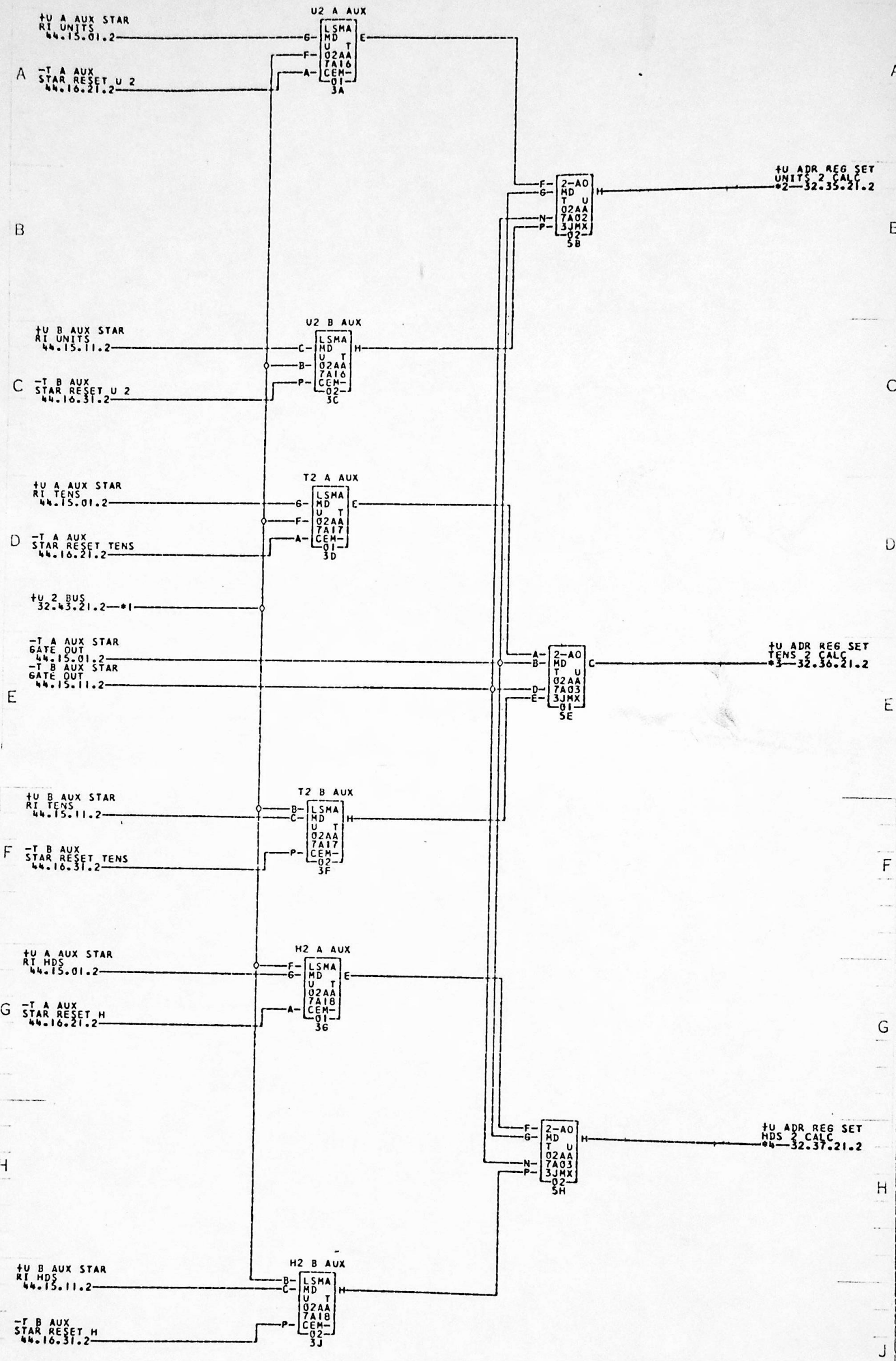


| COMMENTS | TAG | DATE | E.C.NO. | TAG | DATE | E.C.NO. | TAG | DATE | E.C.NO. | TAG | DATE | E.C.NO. |
|---|---|---|---|---|---|---|---|---|---|---|---|---|
| | A | 05-31-61 | 110320J | | | | | | | | | |

+U A AUX STAR RI UNITS 44.15.01.2

A -T A AUX STAR RESET U 2 44.16.21.2

U4 A AUX LSMA MD U T 02AA 7A19 CEM- 01- 3A (G, F, A, E)

+U B AUX STAR RI UNITS 44.15.11.2

C -T B AUX STAR RESET U 2 44.16.31.2

U4 B AUX LSMA MD U T 02AA 7A19 CEM- 02- 3C (C, B, P, H)

+U A AUX STAR RI TENS 44.15.01.2

D -T A AUX STAR RESET TENS 44.16.21.2

T4 A AUX LSMA MD U T 02AA 7A20 CEM- 01- 3D (G, F, A, E)

+U 4 BUS 32.43.31.2 —*1

-T A AUX STAR GATE OUT 44.15.01.2

E -T B AUX STAR GATE OUT 44.15.11.2

+U B AUX STAR RI TENS 44.15.11.2

F -T B AUX STAR RESET TENS 44.16.31.2

T4 B AUX LSMA MD U T 02AA 7A20 CEM- 02- 3F (B, C, P, H)

+U A AUX STAR RI HDS 44.15.01.2

G -T A AUX STAR RESET H 44.16.21.2

H4 A AUX LSMA MD U T 02AA 7A21 CEM- 01- 3G (F, G, A, E)

+U B AUX STAR RI HDS 44.15.11.2

J -T B AUX STAR RESET H 44.16.31.2

H4 B AUX LSMA MD U T 02AA 7A21 CEM- 02- 3J (B, C, P, H)

2-AO MD T U 02AA 7A04 3JMX 01- 5B (A, B, D, E → C)

+U ADR REG SET UNITS 4 CALC *2—32.35.31.2

2-AO MD T U 02AA 7A04 3JMX 02- 5E (F, G, N, P → H)

+U ADR REG SET TENS 4 CALC *3—32.36.31.2

2-AO MD T U 02AA 7A05 3JMX 01- 5H (A, B, D, E → C)

+U ADR REG SET HDS 4 CALC *4—32.37.31.2

*1—02A7B26D
01A7A24H

*2—02A7A25C
*4—02A7A25N

02A9D05A
02A9C05A

01A7A24C
01A7A24N

*3—02A7A25H

02A9B15A

| COMMENTS | TAG | DATE | E.C.NO. | TAG | DATE | E.C.NO. | TAG | DATE | E.C.NO. | TAG | DATE | E.C.NO. |
|---|---|---|---|---|---|---|---|---|---|---|---|---|
| | A | 05-31-61 | 110320J | | | | | | | | | |

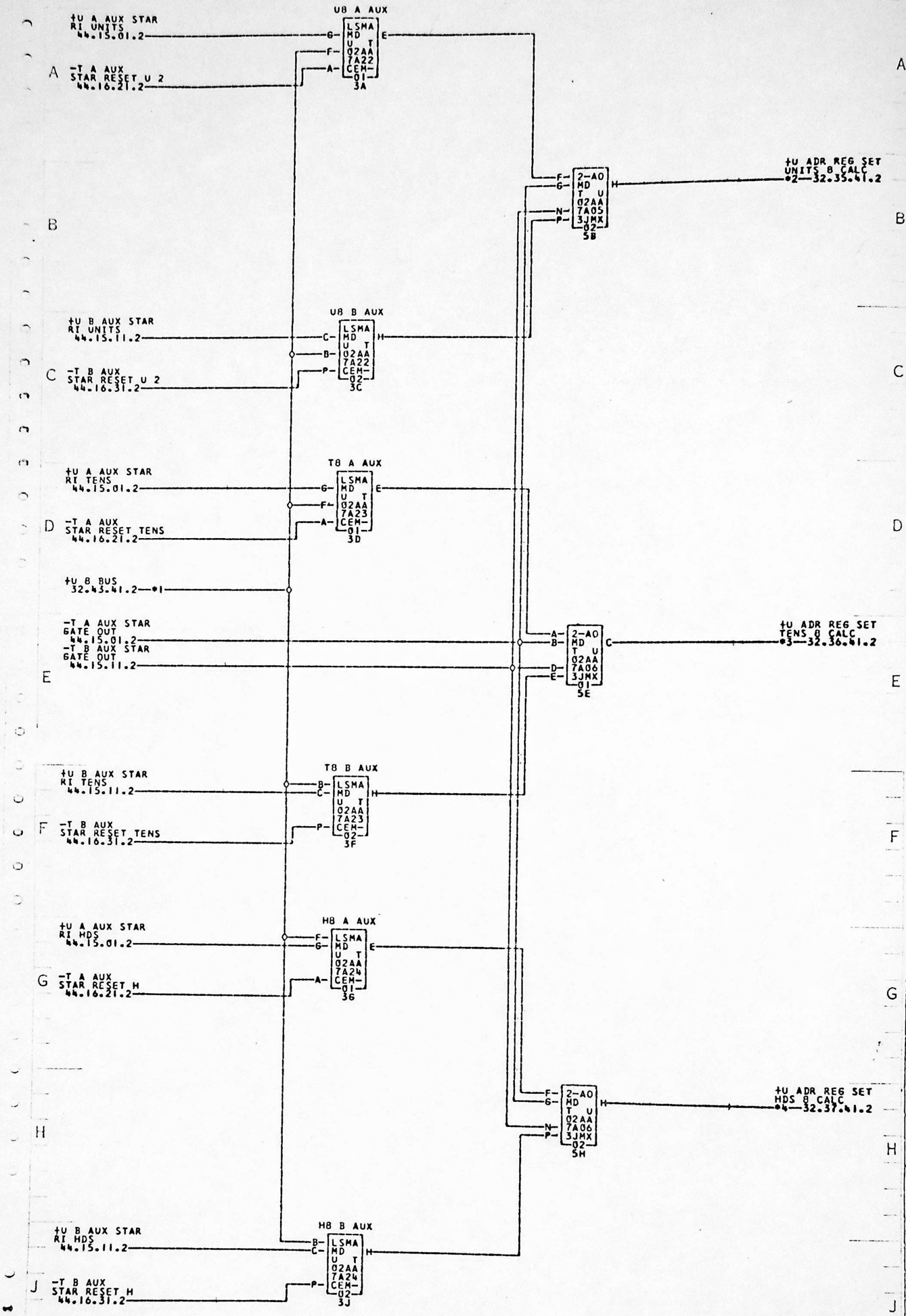


| COMMENTS | TAG | DATE | E.C.NO. | TAG | DATE | E.C.NO. | TAG | DATE | E.C.NO. | TAG | DATE | E.C.NO. |
|---|---|---|---|---|---|---|---|---|---|---|---|---|
| | A | 05-31-61 | 110320J | | | | | | | | | |

IBM FORM 024 9015-1

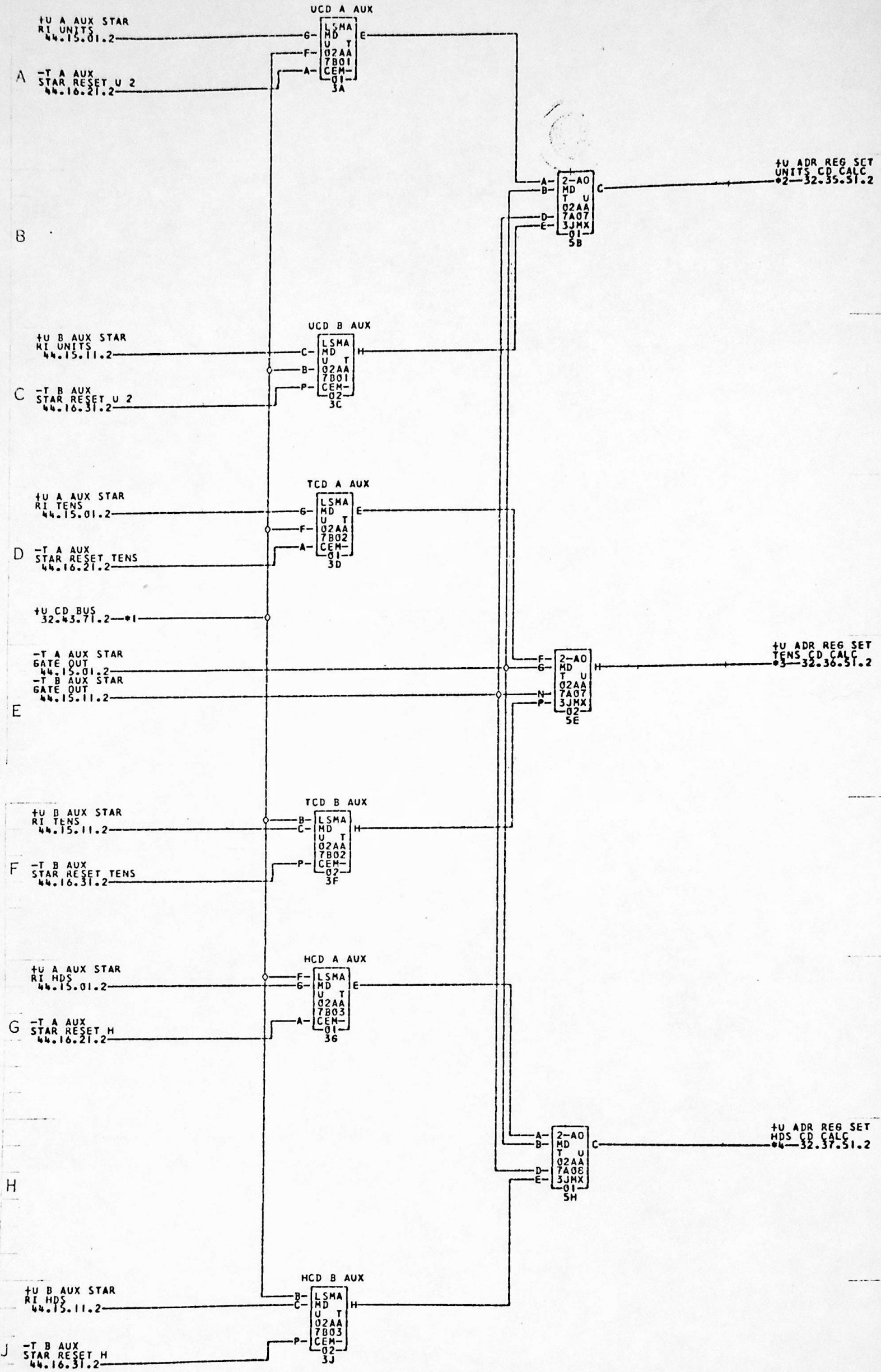


| COMMENTS | TAG | DATE | E.C.NO. | TAG | DATE | E.C.NO. | TAG | DATE | E.C.NO. | TAG | DATE | E.C.NO. |
|---|---|---|---|---|---|---|---|---|---|---|---|---|
| | A | 05-31-61 | 1103201 | | | | | | | | | |

UA A AUX

-T A AUX STAR RESET U 1 44.16.21.2

+U UNITS A BUS 42.62.01.2—*1

UA B AUX

-T B AUX STAR RESET U 1 44.16.31.2

-T A AUX STAR GATE OUT 44.15.01.2

-T B AUX STAR GATE OUT 44.15.11.2

+U ADR REG SET UNITS A CALC *3—42.61.01.2

HA A AUX

+U A AUX STAR RI HDS 44.15.01.2

-T A AUX STAR RESET H 44.16.21.2

+U A BUS 32.43.51.2—*2

-T ADR REG SET HDS A CALC *4—32.38.11.2

HA B AUX

+U B AUX STAR RI HDS 44.15.11.2

-T B AUX STAR RESET H 44.16.31.2

*1—02A7B26N
01A7E23A

*2—02A7B266
*4—02A7B26A

*3—02A7B26R
02A9C15A

02A9E05A
01A8F26A

01A8F26R
01A8D25N

01A8B26A
01A7B26N

COMMENTS
CARDS-B04 AND A09 MUST BE ADDED FOR 8K 12K AND 16K MEMORY OPTIONS ONLY.

| TAG | DATE | E.C.NO. | TAG | DATE | E.C.NO. | TAG | DATE | E.C.NO. | TAG | DATE | E.C.NO. |
|---|---|---|---|---|---|---|---|---|---|---|---|
| A | 05-31-61 | 110320J | | | | | | | | | |

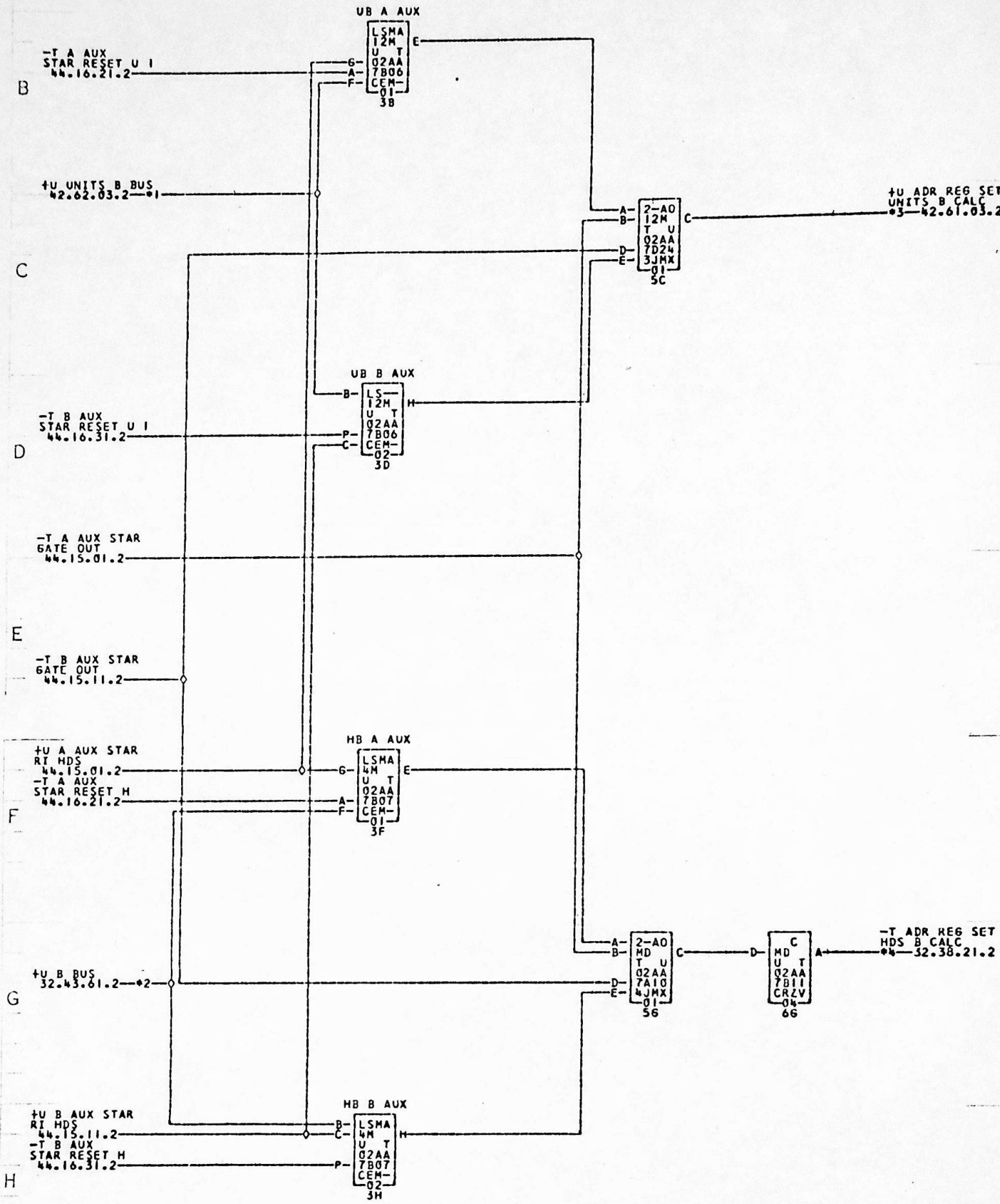


*1—02A7D26A
02A9D17A

*2—02A7B26H
01A8F26M

*3—02A7B26Q
01A8D25M

02A9E03A
01A7B26M

01A8F26Q

*4—02A7B26M

COMMENTS
CARDS-B07 MUST BE ADDED FOR 4K 8K 12K AND 16K MEMORY OPTIONS ONLY
CARDS-B06 AND D24 MUST BE ADDED FOR 12K AND 16K MEMORY OPTIONS ONLY

| TAG | DATE | E.C.NO. | TAG | DATE | E.C.NO. | TAG | DATE | E.C.NO. | TAG | DATE | E.C.NO. |
|---|---|---|---|---|---|---|---|---|---|---|---|
| A | 05-31-61 | 110320J | | | | | | | | | |

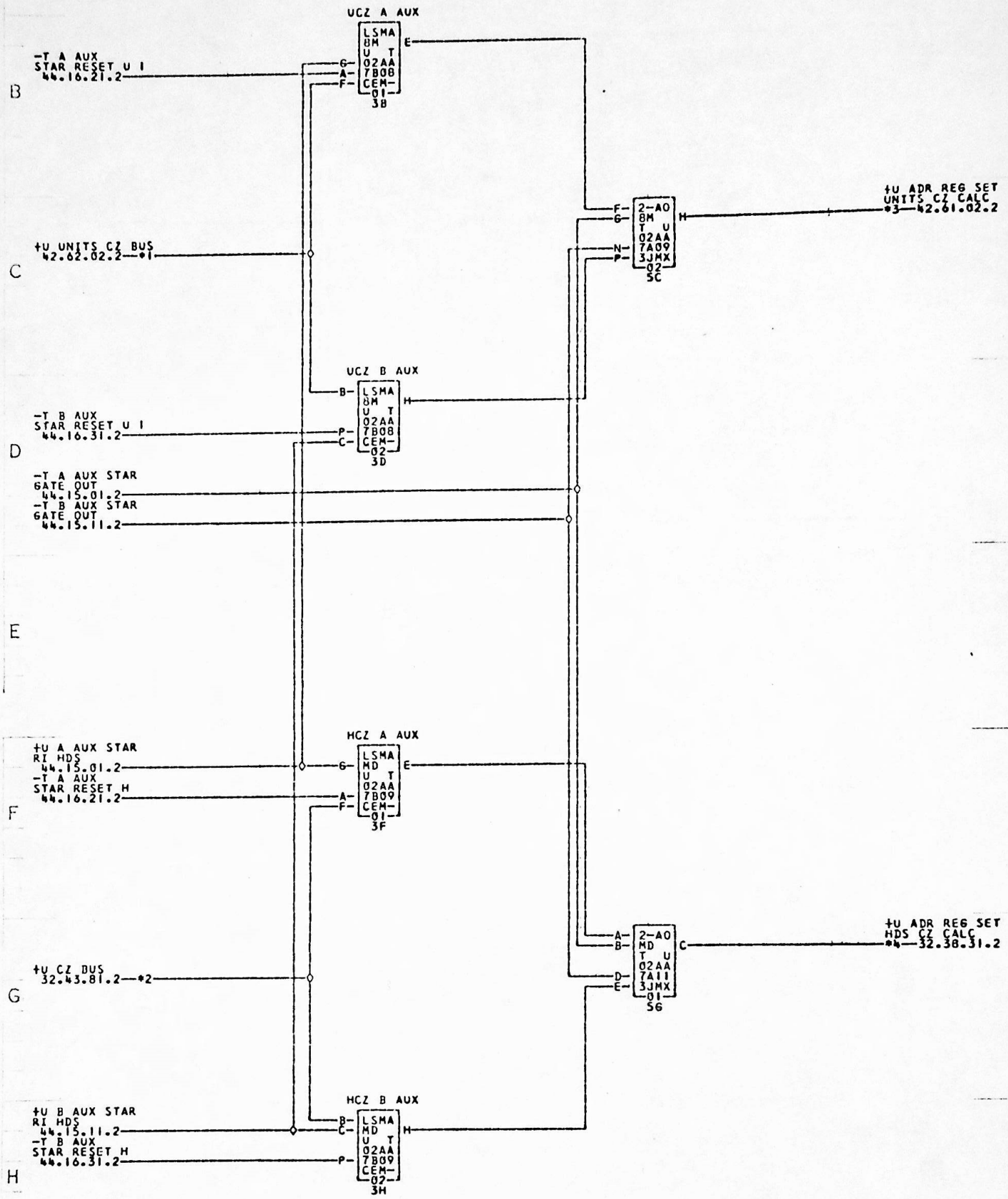


*1—02A7C26R ——01A7E23B *2—02A7B26J *3—02A7B26P ——02A9C11A ——02A9E01A ——01A7A24R ——01A8F26P ——01A8B26B *4—02A7A25R

COMMENTS
CARDS-B08 AND A09 MUST BE ADDED FOR 8K 12K AND 16K MEMORY OPTIONS ONLY

| TAG | DATE | E.C.NO. | TAG | DATE | E.C.NO. | TAG | DATE | E.C.NO. | TAG | DATE | E.C.NO. |
|---|---|---|---|---|---|---|---|---|---|---|---|
| A | 05-31-61 | 110320J | | | | | | | | | |

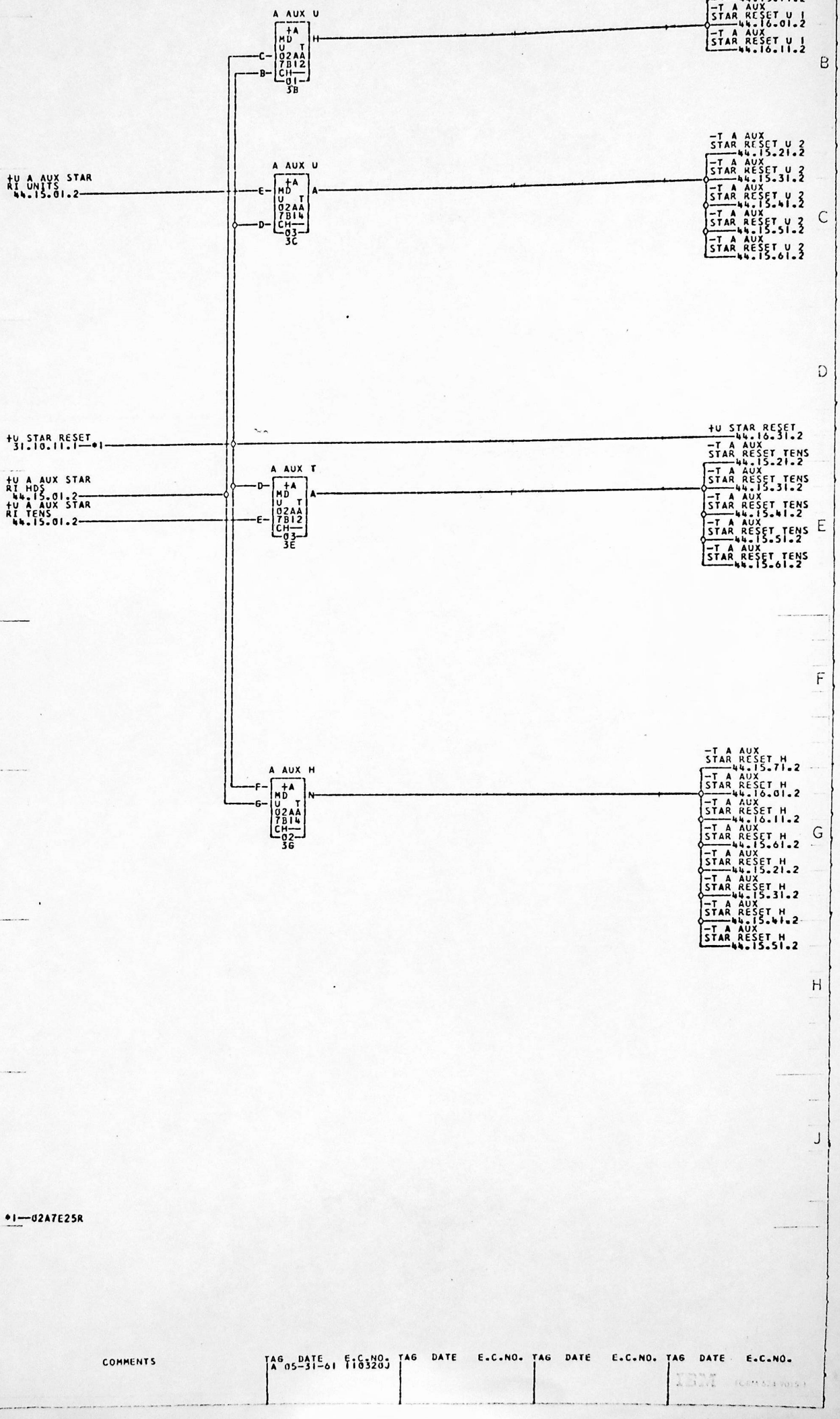


•1—02A7E25R

| COMMENTS | TAG | DATE | E.C.NO. | TAG | DATE | E.C.NO. | TAG | DATE | E.C.NO. | TAG | DATE | E.C.NO. |
|---|---|---|---|---|---|---|---|---|---|---|---|---|
| | A | 05-31-61 | 110320J | | | | | | | | | |

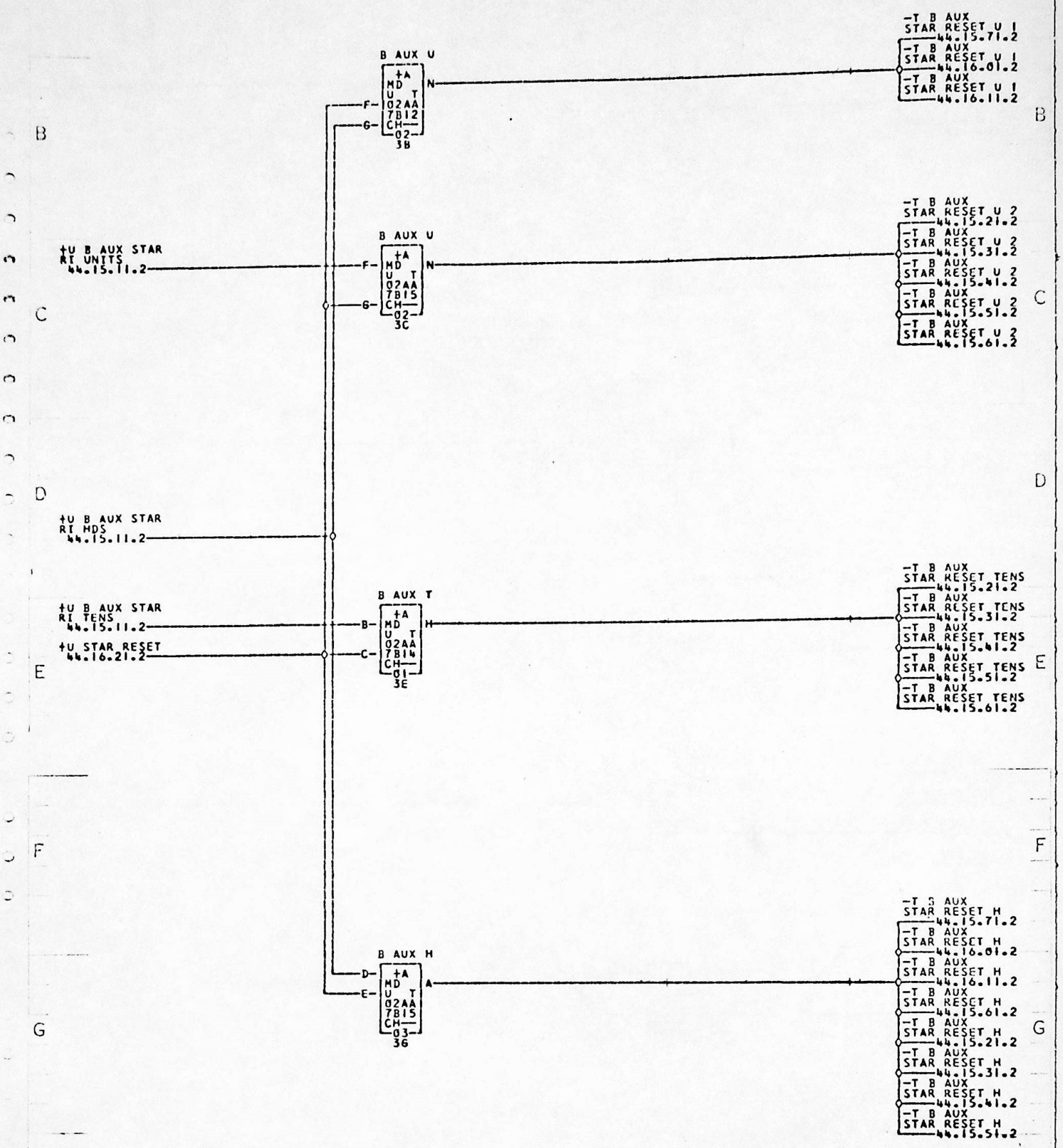


| COMMENTS | TAG | DATE | E.C.NO. | TAG | DATE | E.C.NO. | TAG | DATE | E.C.NO. | TAG | DATE | E.C.NO. |
|---|---|---|---|---|---|---|---|---|---|---|---|---|
| | A | 05-31-61 | 110320J | | | | | | | | | |

0724034

# QUI-BINARY DOUBLER ENTRY

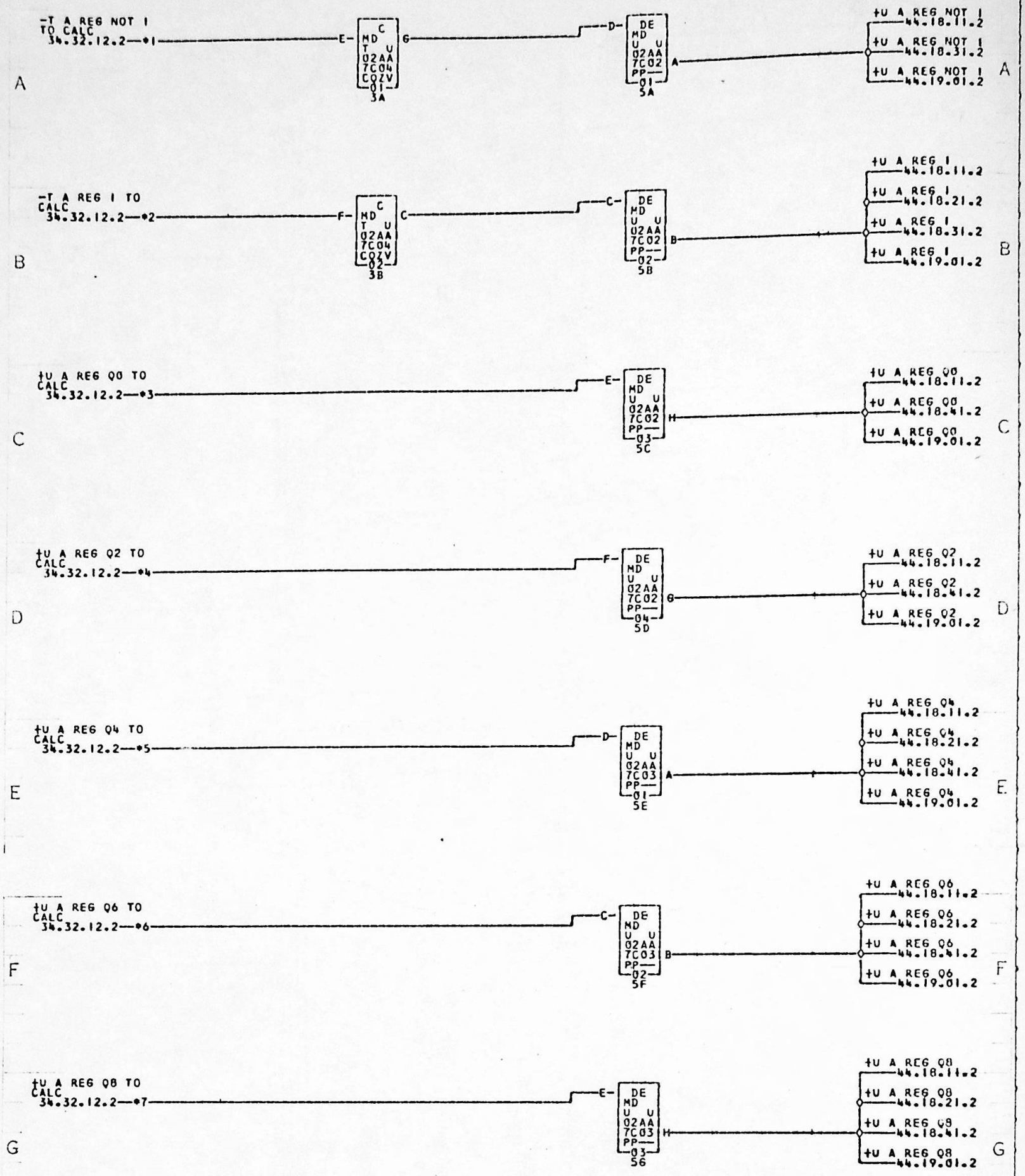


*1—02A7E266 *2—02A7E26F *3—02A7E26A *4—02A7E26B *5—02A7E26C *6—02A7E26D
*7—02A7E26E

| COMMENTS | TAG | DATE | E.C.NO. | TAG | DATE | E.C.NO. | TAG | DATE | E.C.NO. | TAG | DATE | E.C.NO. |
|---|---|---|---|---|---|---|---|---|---|---|---|---|
| | A | 05-31-61 | 110320J | | | | | | | | | |

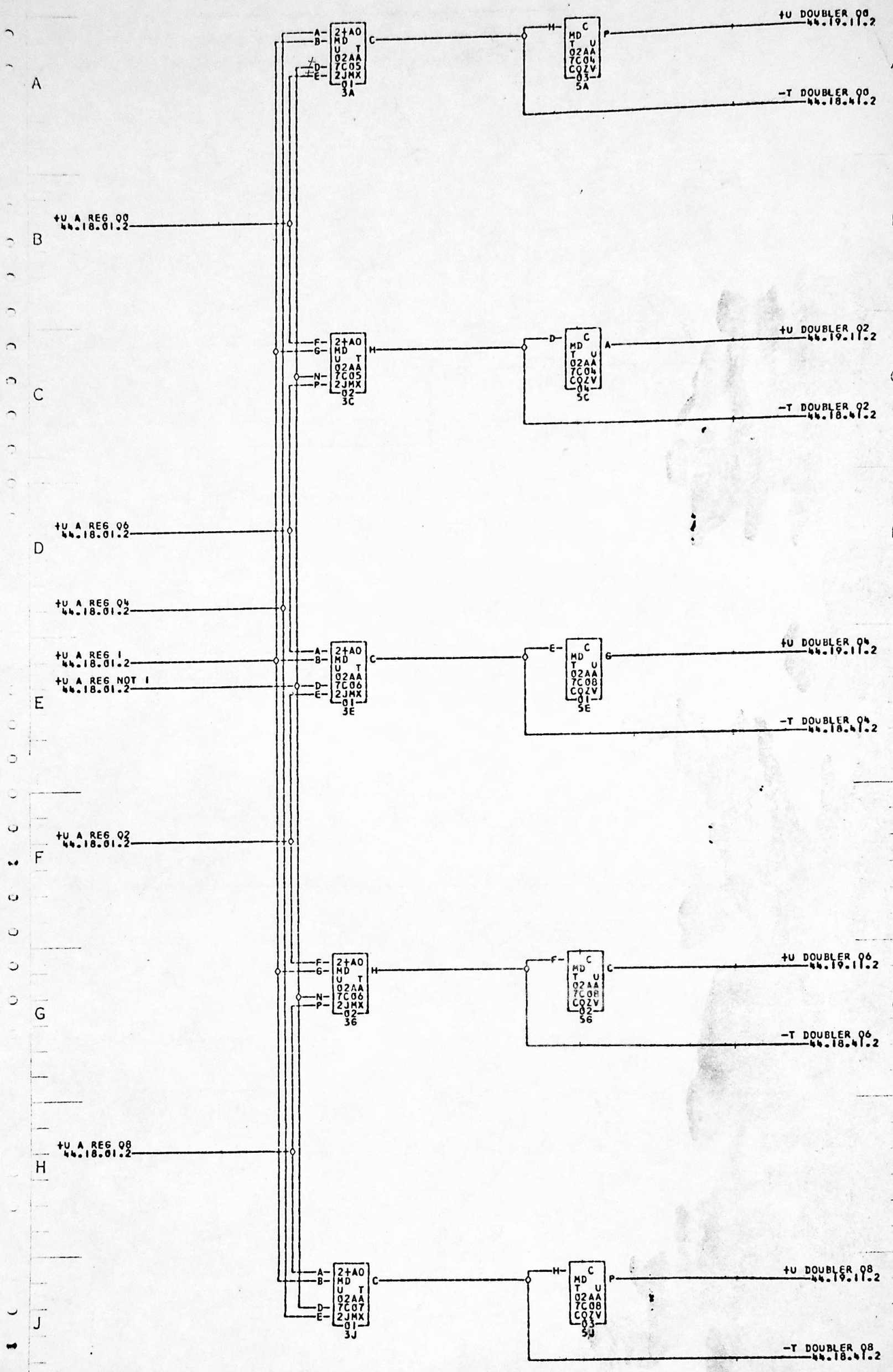


| COMMENTS | TAG | DATE | E.C.NO. | TAG | DATE | E.C.NO. | TAG | DATE | E.C.NO. | TAG | DATE | E.C.NO. |
|---|---|---|---|---|---|---|---|---|---|---|---|---|
| | A | 05-31-61 | 1103203 | | | | | | | | | |

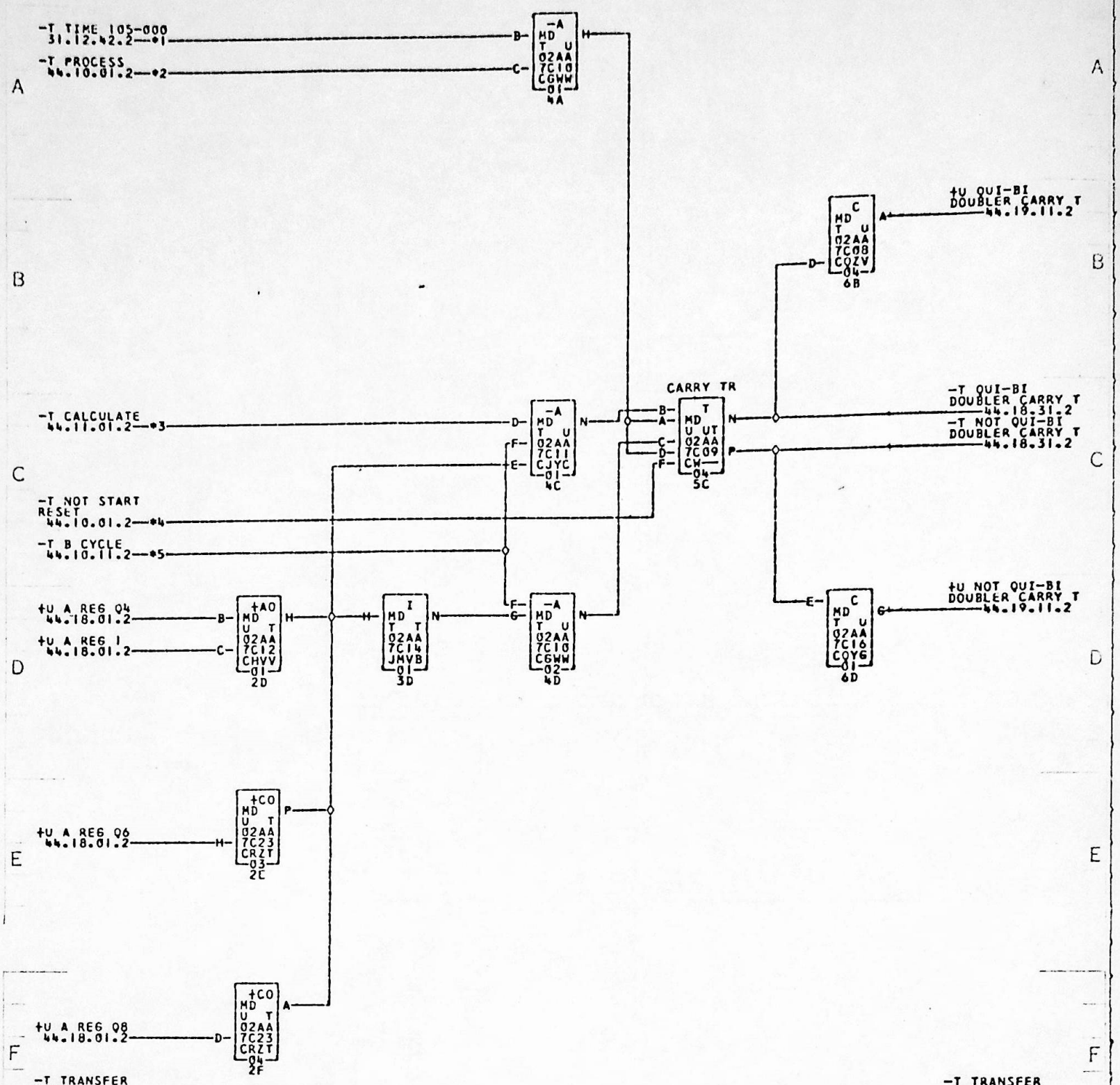


*1—02A7A26M *2—02A7A26L *3—02A7A26N *4—02A7D26B *5—02A7D26G *6—02A7C26L
*7—02A7C26J *8—02A7D26M *9—02A7B26K —02A9D13A —01A8F26K *A—02A7B26L
—02A9D15A —01A8F26L *B—02A7E25N —02A9F13G —01B3C02N

NOTE 1 SIGNAL NOT USED SEE COMMENT ON 34.31.11.2

COMMENTS

| TAG | DATE | E.C.NO. | TAG | DATE | E.C.NO. | TAG | DATE | E.C.NO. | TAG | DATE | E.C.NO. |
|---|---|---|---|---|---|---|---|---|---|---|---|
| A | 05-31-61 | 1103203 | | | | | | | | | |

IBM FORM 224-6015-1

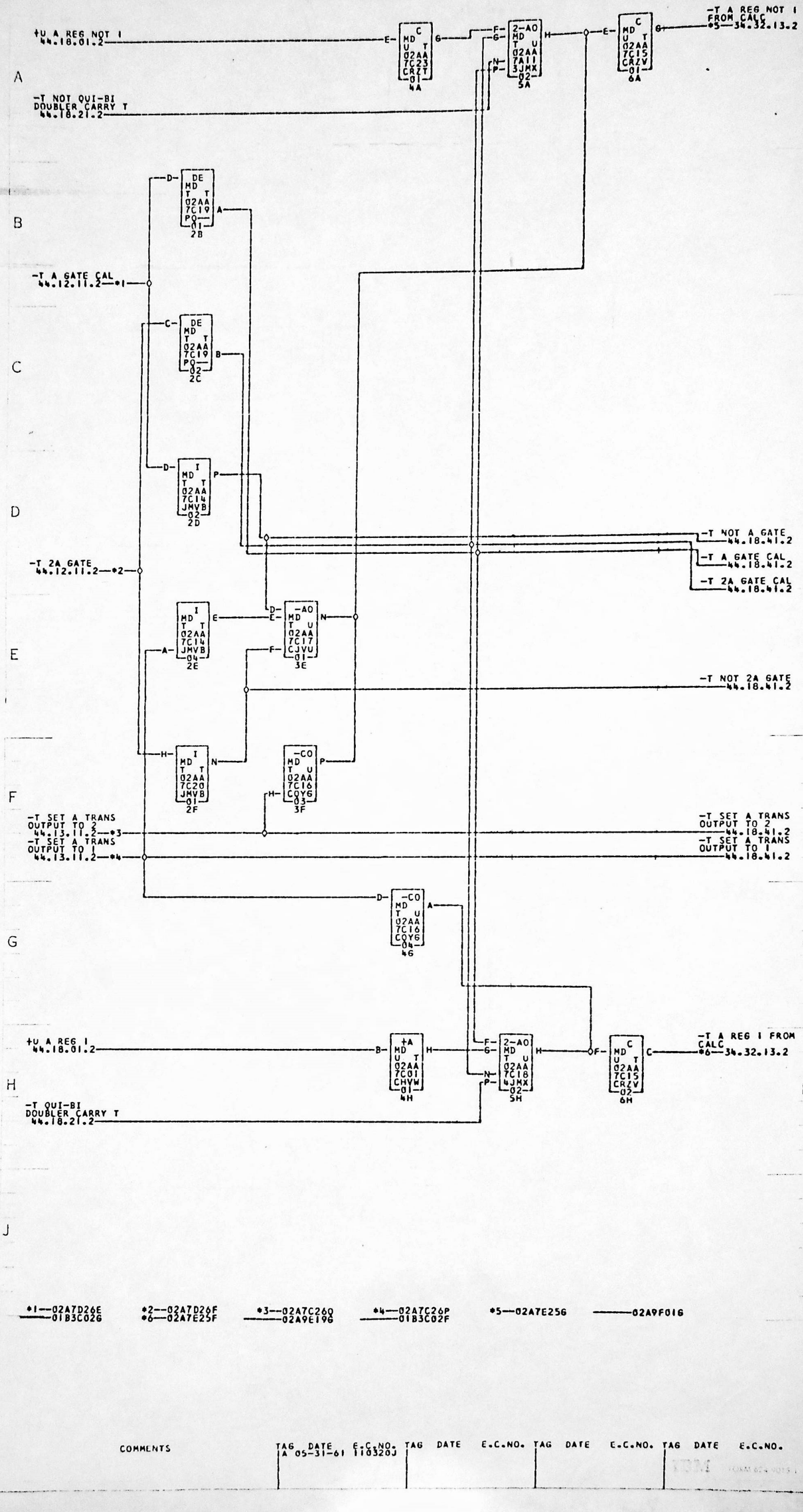


*1—02A7D26E —01B3C026 *2—02A7D26F *6—02A7E25F *3—02A7C260 —02A9E196 *4—02A7C26P —01B3C02F *5—02A7E256 —02A9F016

| COMMENTS | TAG | DATE | E.C.NO. | TAG | DATE | E.C.NO. | TAG | DATE | E.C.NO. | TAG | DATE | E.C.NO. |
|---|---|---|---|---|---|---|---|---|---|---|---|---|
| | A | 05-31-61 | 1103203 | | | | | | | | | |

0724038

# TRUE COMPLEMENT QUINARY ENTRY

-T DOUBLER Q0 44.18.11.2

+U A REG Q0 44.18.01.2 → E- C MD U T 02AA 7C22 CRZV -01- 3A → G- → A REG Q0 A- 2-AO MD T U 02AA 7C24 4JMX 01 5A C- → +U A REG Q0 FROM CALC *1—34.32.13.2

-T SET A TRANS OUTPUT TO 1 44.18.31.2 → F- -CO MD T U 02AA 7C16 CQYG -02- 3B C- → B- 2-AO

-T NOT A GATE 44.18.31.2 → A- -AO MD T U 02AA 7C17 CJVU -02- 3C

-T SET A TRANS OUTPUT TO 2 44.18.31.2 → B- I MD T T 02AA 7C14 JMVB -03- 2C C-

-T NOT 2A GATE 44.18.31.2 → C-

H- -C0 MD T U 02AA 7C21 CQZT -03- 3D P-

-T A GATE CAL 44.18.31.2

-T DOUBLER Q2 44.18.11.2

+U A REG Q2 44.18.01.2 → F- C MD U T 02AA 7C22 CRZV -02- 3E C- → F- A REG Q2 2-AO MD T U 02AA 7C24 4JMX 02 5E H- → +U A REG Q2 FROM CALC *2—34.32.13.2

-T 2A GATE CAL 44.18.31.2

-T DOUBLER Q4 44.18.11.2

+U A REG Q4 44.18.01.2 → H- C MD U T 02AA 7C22 CRZV -03- 3F P- → E- A REG Q4 A- 2-AO MD T U 02AA 7D16 4JMX 01 5F C- → +U A REG Q4 FROM CALC *3—34.32.13.2

-T DOUBLER Q6 44.18.11.2

+U A REG Q6 44.18.01.2 → D- C MD U T 02AA 7C22 CRZV -04- 3G A- → N- A REG Q6 F- 2-AO MD T U 02AA 7D16 4JMX 02 5G H- → +U A REG Q6 FROM CALC *4—34.32.13.2

-T DOUBLER Q8 44.18.11.2

+U A REG Q8 44.18.01.2 → H- C MD U T 02AA 7C15 CRZV -03- 3J P- → D- A REG Q8 A- 2-AO MD T U 02AA 7C18 4JMX 01 5J C- → +U A REG Q8 FROM CALC *5—34.32.13.2

*1—02A7E25A ——02A9E096 ——01B3C02A
*3—02A7E25C ——02A9E136 ——01B3C02C
*5—02A7E25E ——02A9E176 ——01B3C02E

*2—02A7E25B ——02A9E116 ——01B3C02B
*4—02A7E25D ——02A9E156 ——01B3C02D

| COMMENTS | TAG | DATE | E.C.NO. | TAG | DATE | E.C.NO. | TAG | DATE | E.C.NO. | TAG | DATE | E.C.NO. |
|---|---|---|---|---|---|---|---|---|---|---|---|---|
| | A | 05-31-61 | 110320J | | | | | | | | | |

IBM FORM 624 9015 1

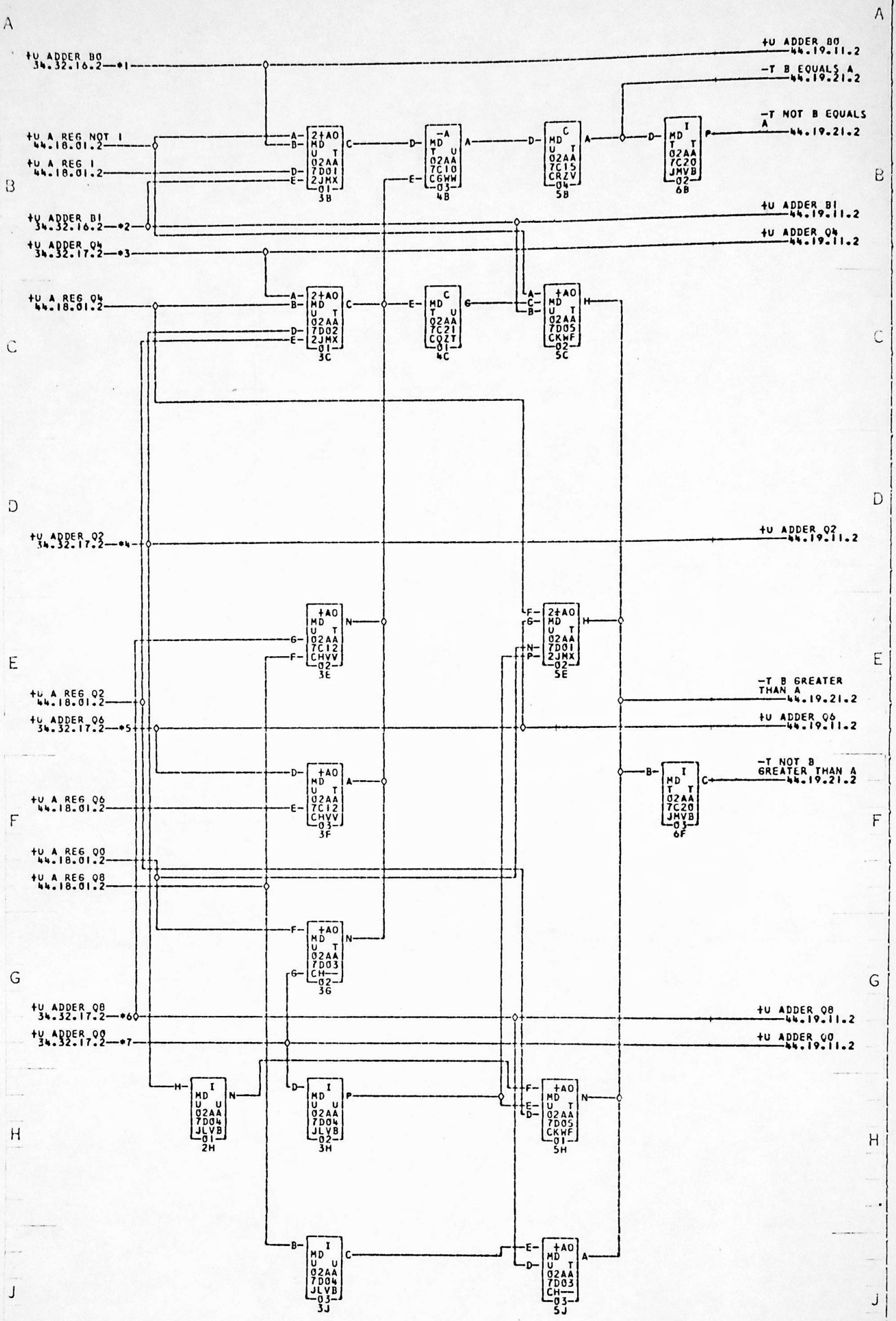


*1—02A7E25J *2—02A7E25K *3—02A7E26L *4—02A7E26K *5—02A7E26M *6—02A7E26Q
*7—02A7E26J

| COMMENTS | TAG | DATE | E.C.NO. | TAG | DATE | E.C.NO. | TAG | DATE | E.C.NO. | TAG | DATE | E.C.NO. |
|---|---|---|---|---|---|---|---|---|---|---|---|---|
| | A | 05-31-61 | 1103203 | | | | | | | | | |

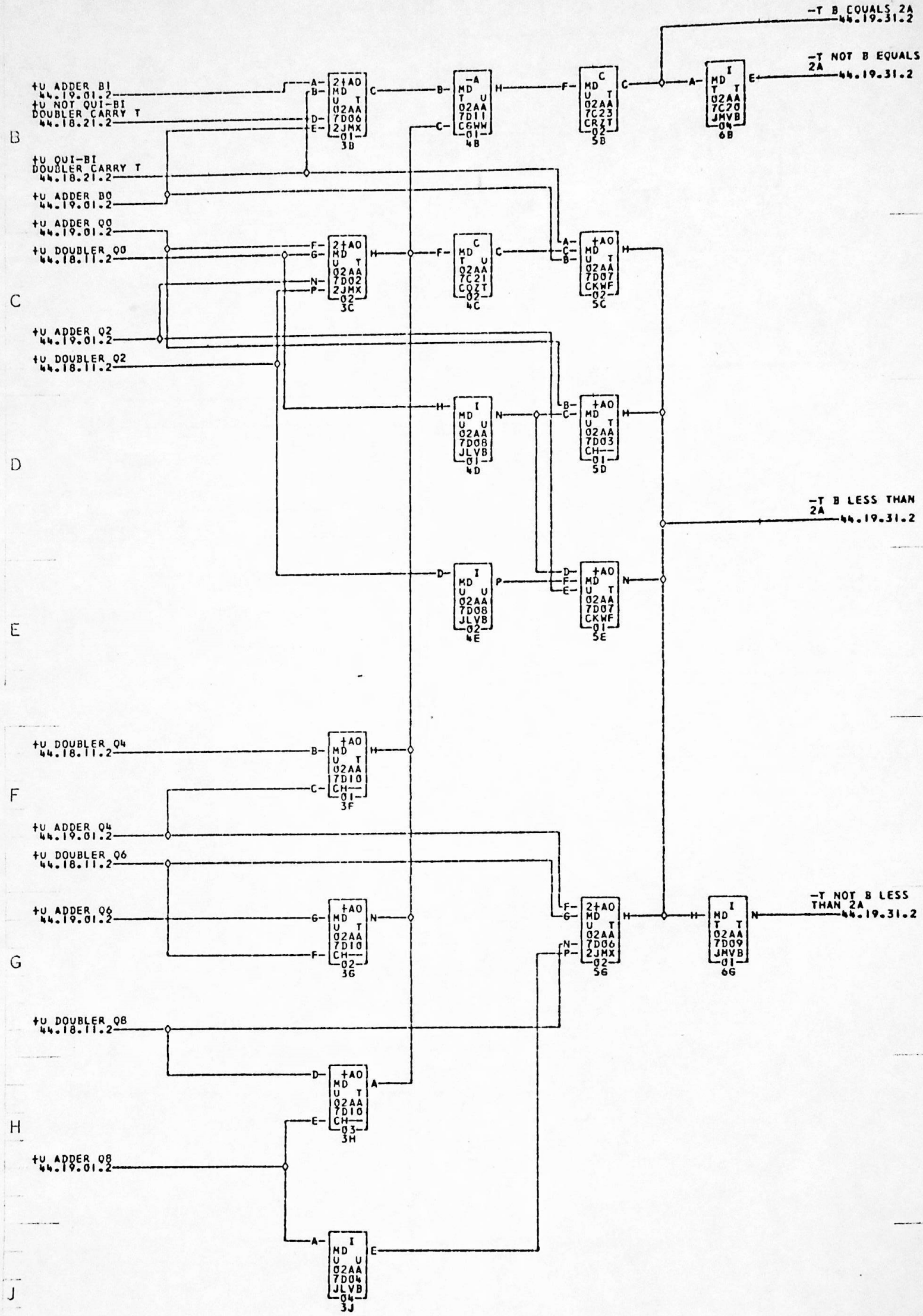


| COMMENTS | TAG | DATE | E.C.NO. | TAG | DATE | E.C.NO. | TAG | DATE | E.C.NO. | TAG | DATE | E.C.NO. |
|---|---|---|---|---|---|---|---|---|---|---|---|---|
| | A | 05-31-61 | 1103203 | | | | | | | | | |

0724041 A COMPARE LATCHES 1401 MD 44.19.21.2

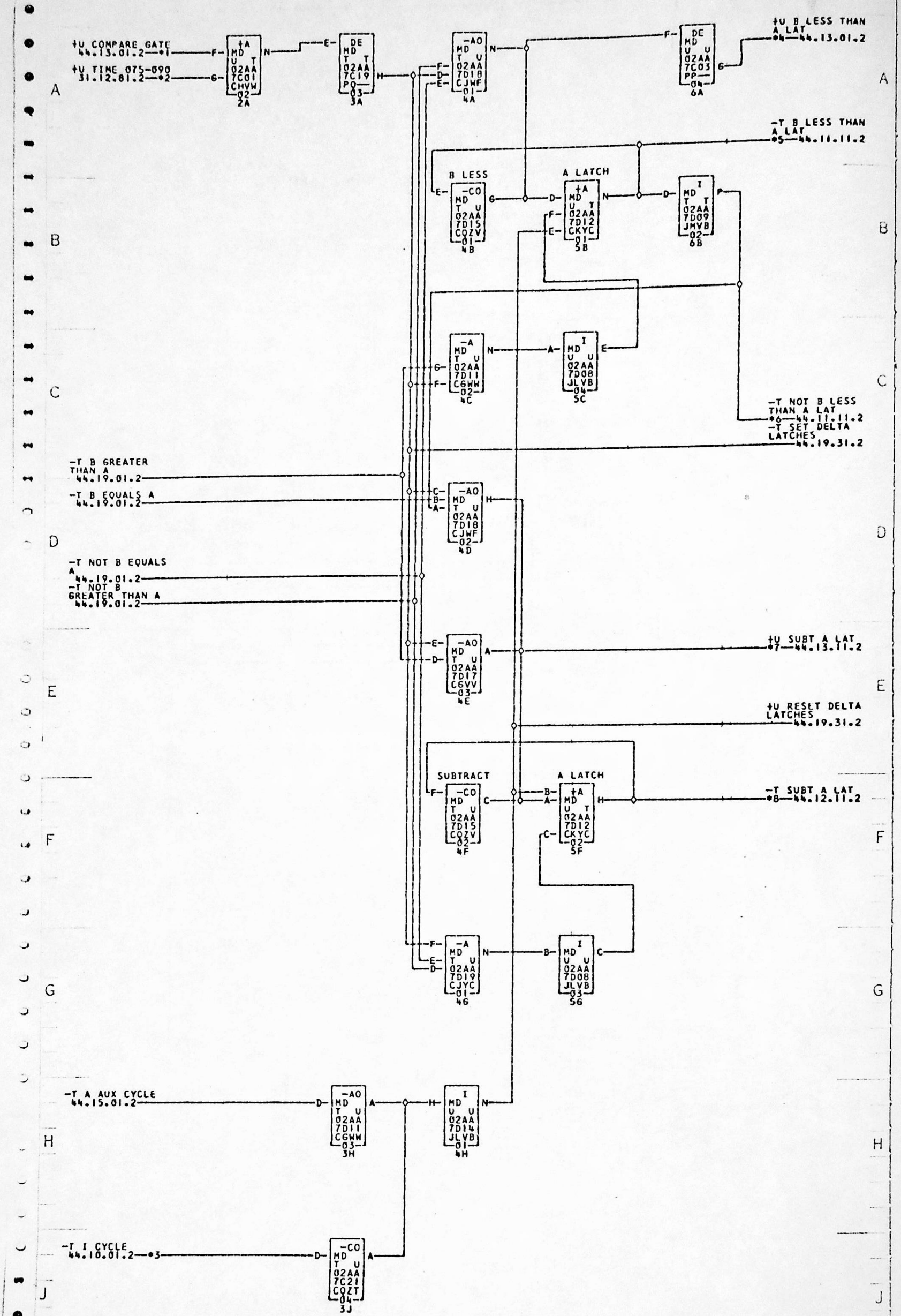


•1—02A7C26E
02B7C02F
02B7C02E
•2—02A7E25Q
•6—02A7A26G
•3—02A7D26H
02B7C02G
•4—02A7A26A
•7—02A7A26B
02B7C02A
02B7C02B
•5—02A7A26F
•8—02A7A26E

| COMMENTS | TAG | DATE | E.C.NO. | TAG | DATE | E.C.NO. | TAG | DATE | E.C.NO. | TAG | DATE | E.C.NO. |
|---|---|---|---|---|---|---|---|---|---|---|---|---|
| | A | 05-31-61 | 1103203 | | | | | | | | | |

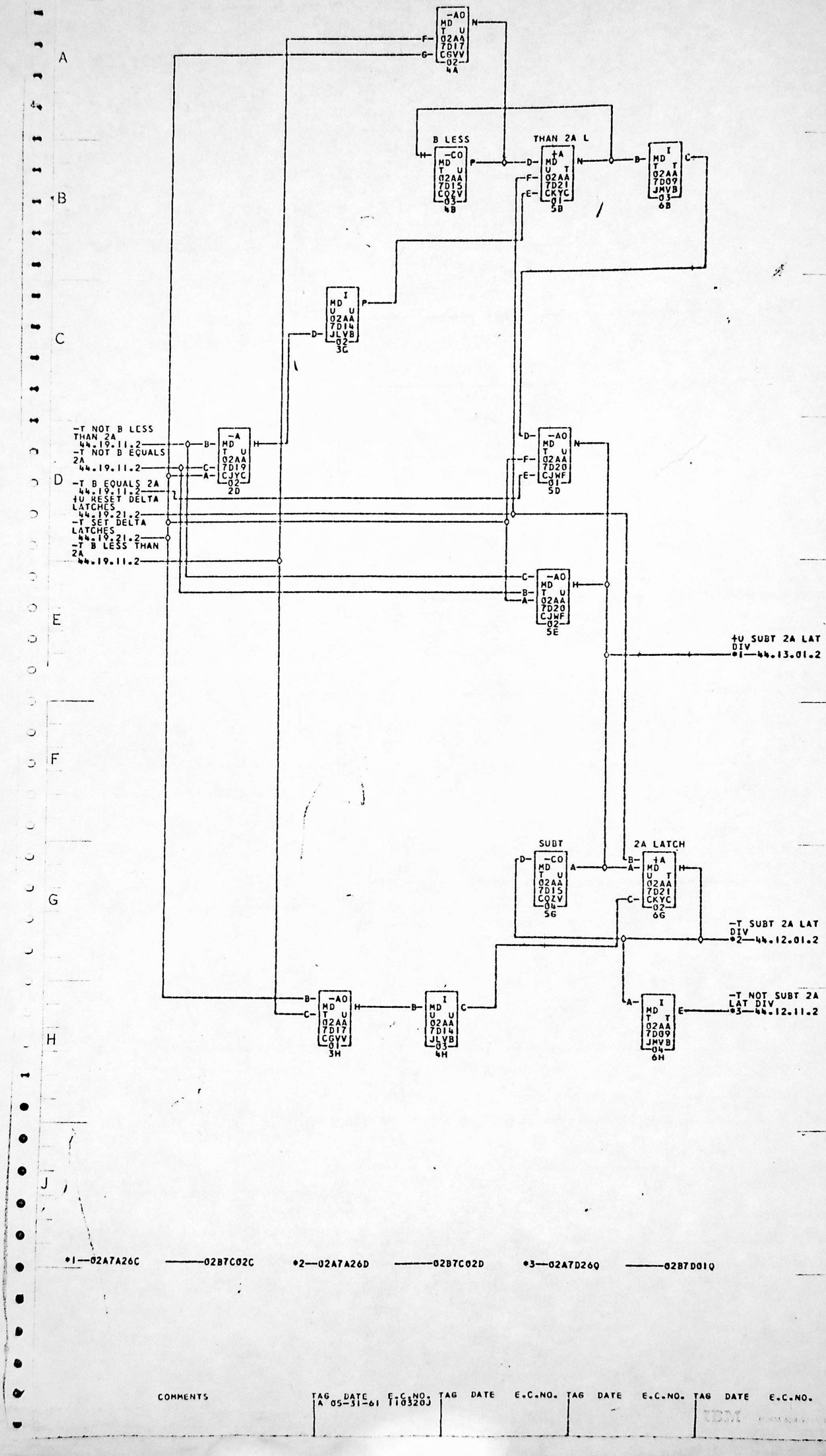


| COMMENTS | TAG | DATE | E.C.NO. | TAG | DATE | E.C.NO. | TAG | DATE | E.C.NO. | TAG | DATE | E.C.NO. |
|---|---|---|---|---|---|---|---|---|---|---|---|---|
| | A | 05-31-61 | 110320J | | | | | | | | | |

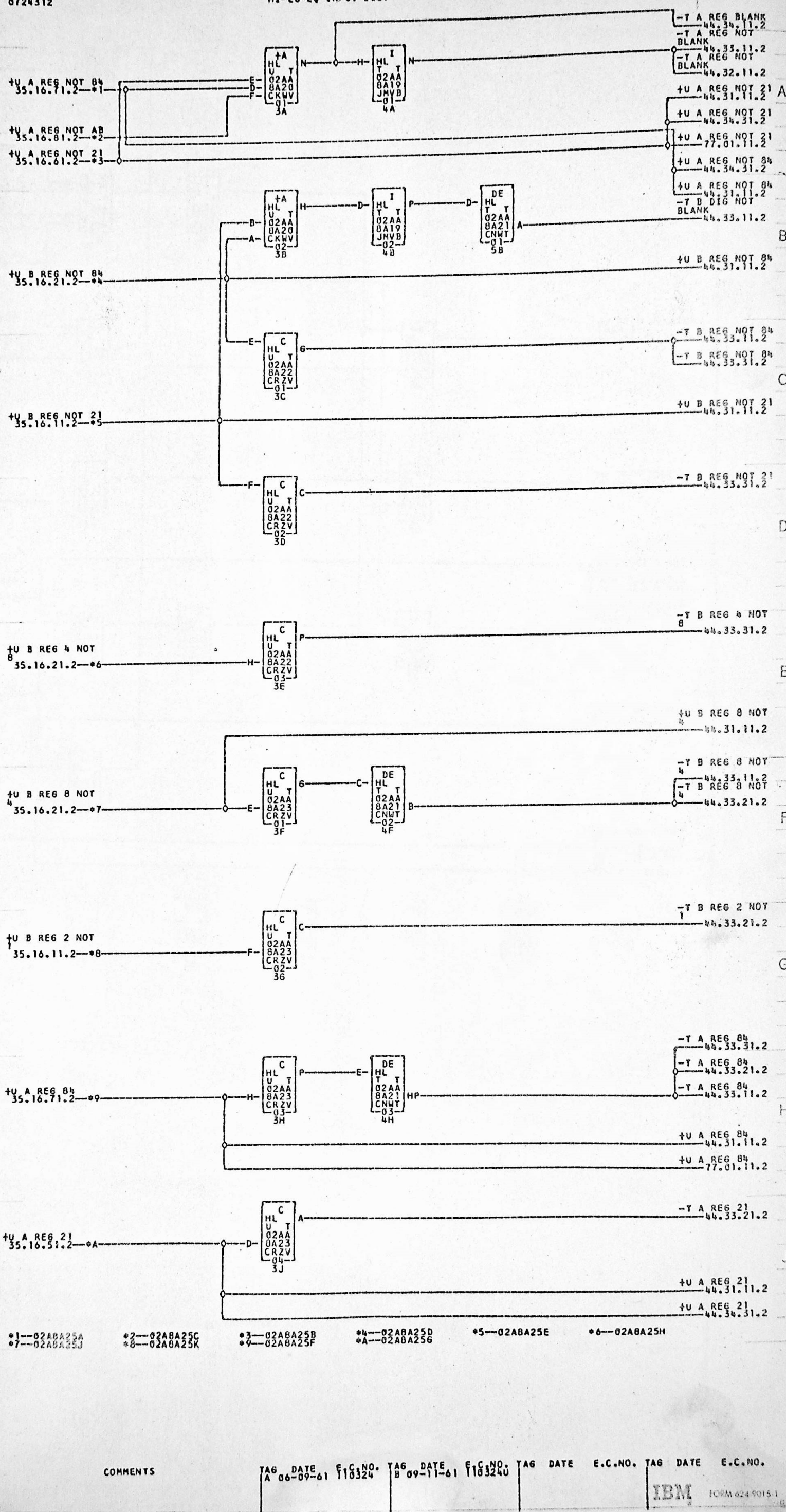


COMMENTS

| TAG | DATE | E.C.NO. | TAG | DATE | E.C.NO. | TAG | DATE | E.C.NO. | TAG | DATE | E.C.NO. |
|---|---|---|---|---|---|---|---|---|---|---|---|
| A | 06-09-61 | 110324 | B | 09-11-61 | 110340 | | | | | | |

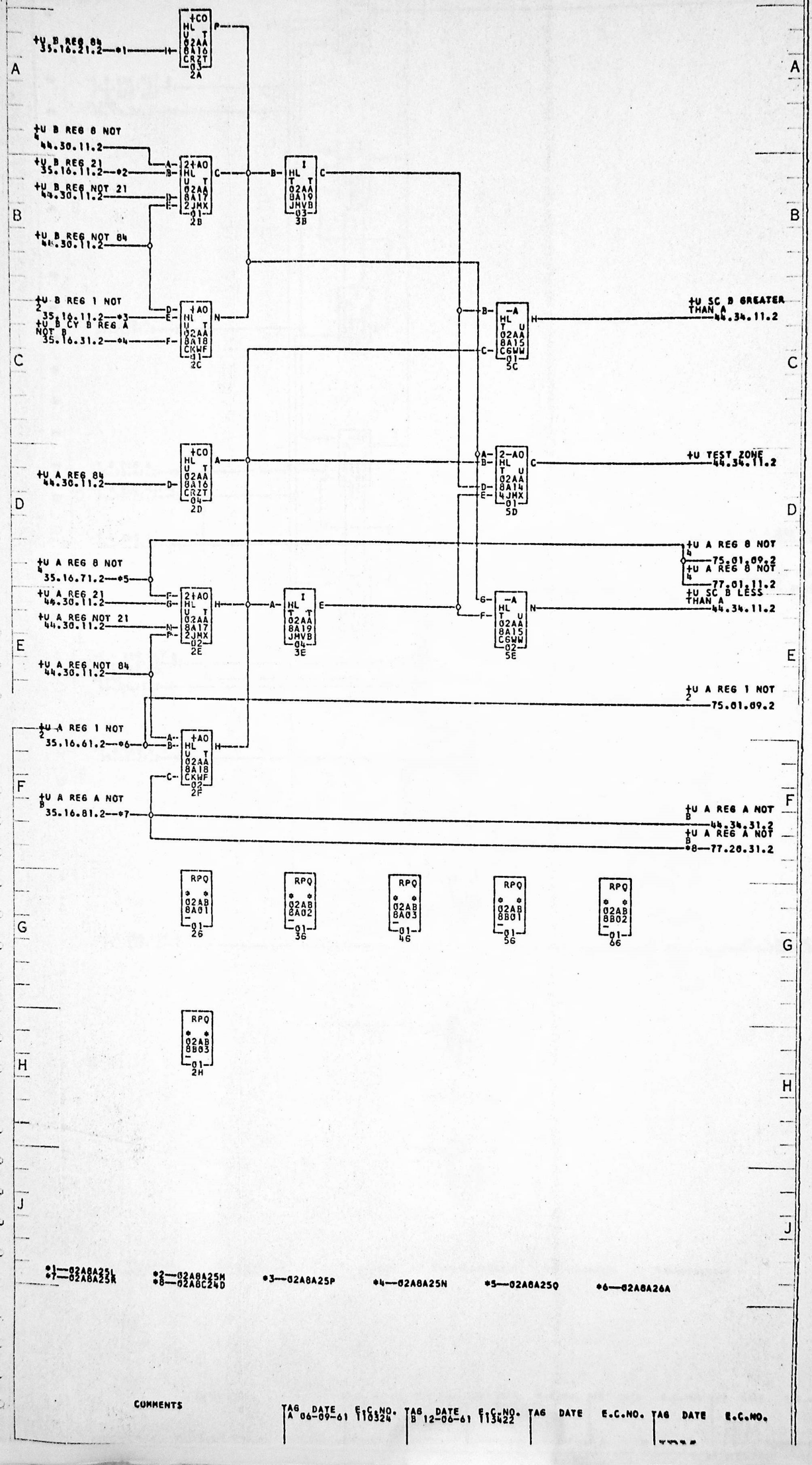


COMMENTS

| TAG | DATE | E.C.NO. | TAG | DATE | E.C.NO. | TAG | DATE | E.C.NO. | TAG | DATE | E.C.NO. |
|---|---|---|---|---|---|---|---|---|---|---|---|
| A | 06-09-61 | 110324 | B | 12-06-61 | 113422 | | | | | | |

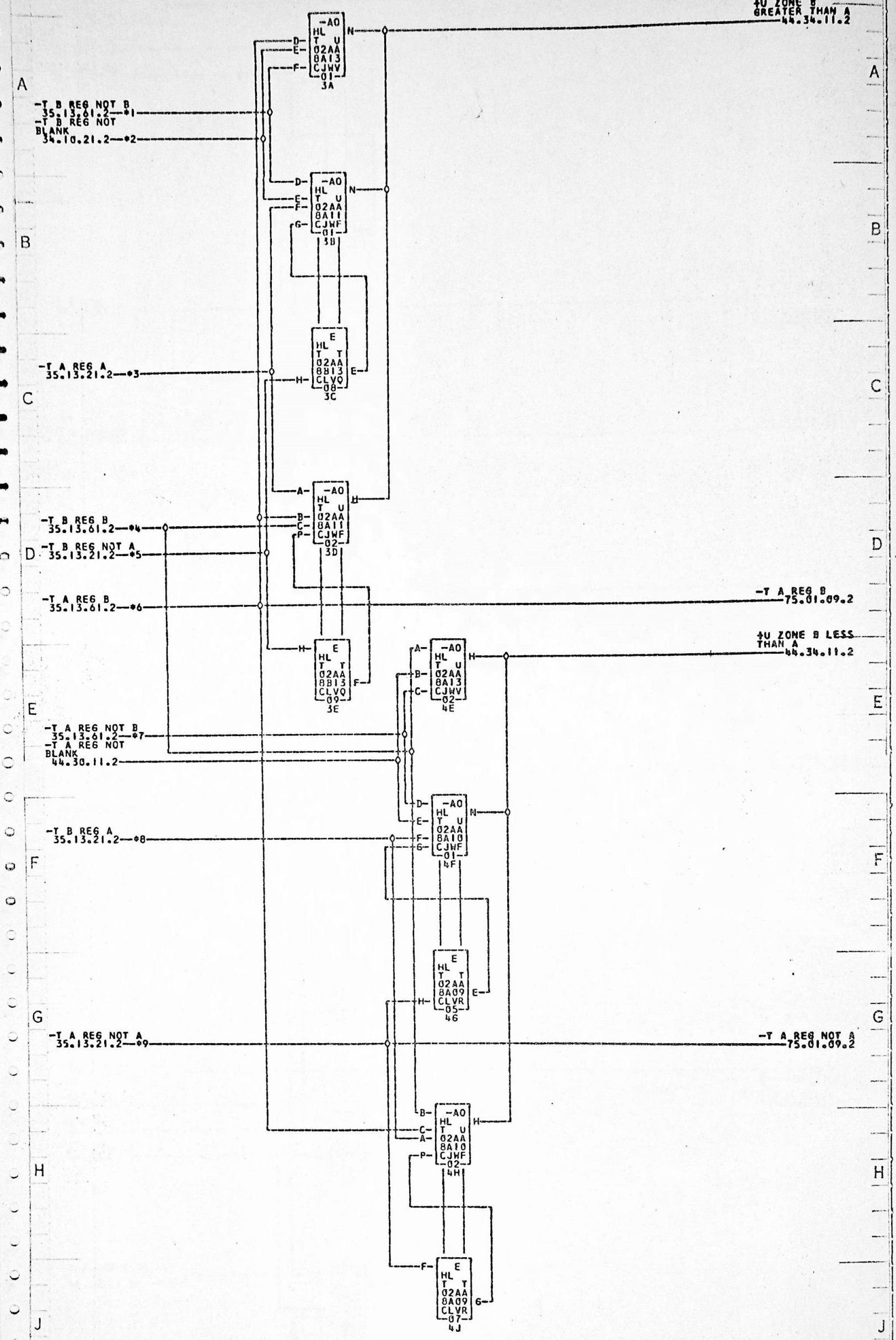


*1—02A8A26B *2—02A8B25H *3—02A8A26D *4—02A8A26E *5—02A8A26F *6—02A8A26C
*7—02A8A26G *8—02A8A26H *9—02A8A26J

| COMMENTS | TAG | DATE | E.C.NO. | TAG | DATE | E.C.NO. | TAG | DATE | E.C.NO. | TAG | DATE | E.C.NO. |
|---|---|---|---|---|---|---|---|---|---|---|---|---|
| | A | 06-09-61 | 110324 | | | | | | | | | |

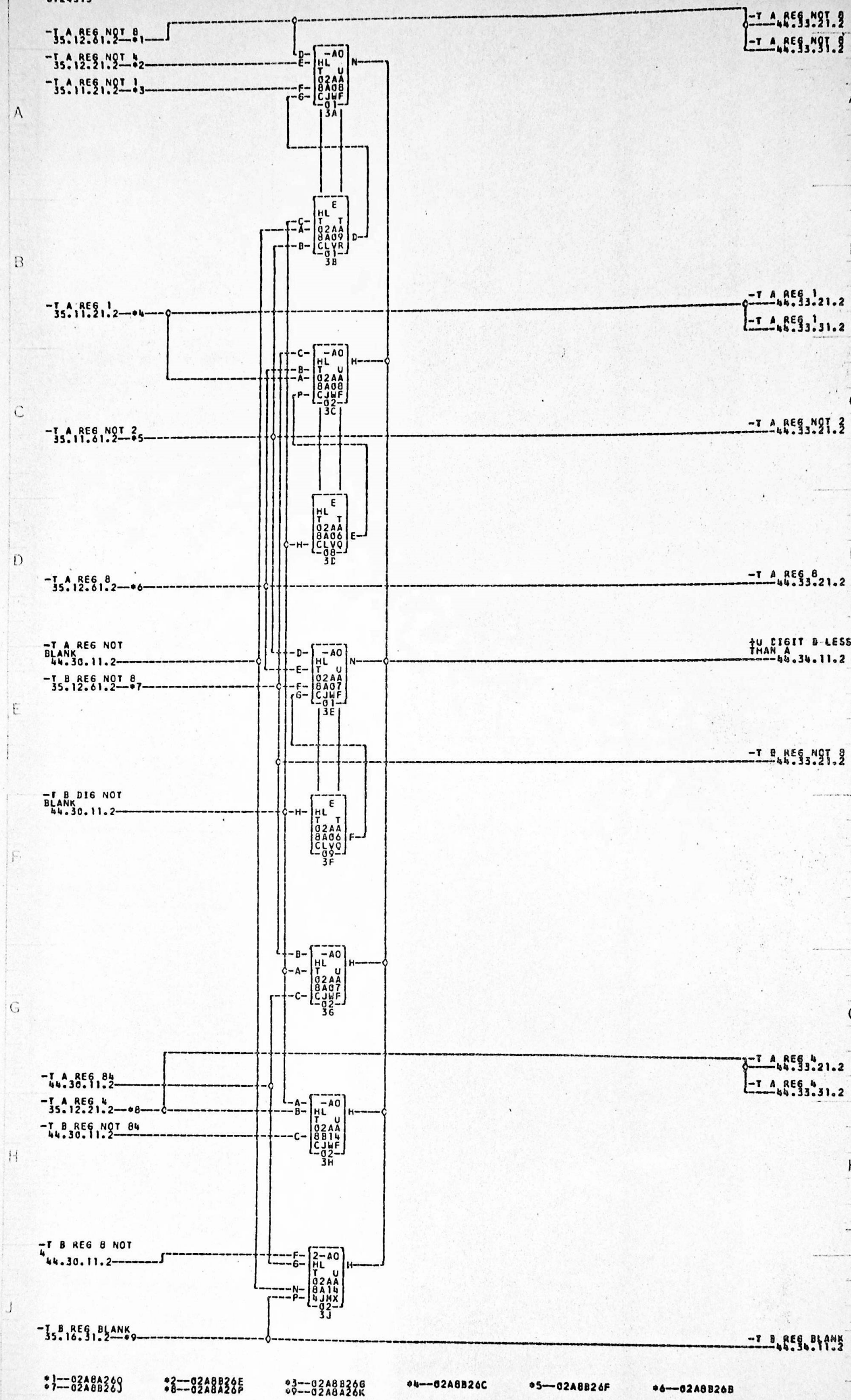


*1—02A8A26D *2—02A8B26E *3—02A8B26G *4—02A8B26C *5—02A8B26F *6—02A8B26B
*7—02A8B26J *8—02A8A26P *9—02A8A26K

| COMMENTS | TAG | DATE | E.C.NO. | TAG | DATE | E.C.NO. | TAG | DATE | E.C.NO. | TAG | DATE | E.C.NO. |
|---|---|---|---|---|---|---|---|---|---|---|---|---|
| | A | 06-09-61 | 1103241 | B | 09-01-61 | 1103245 | | | | | | |

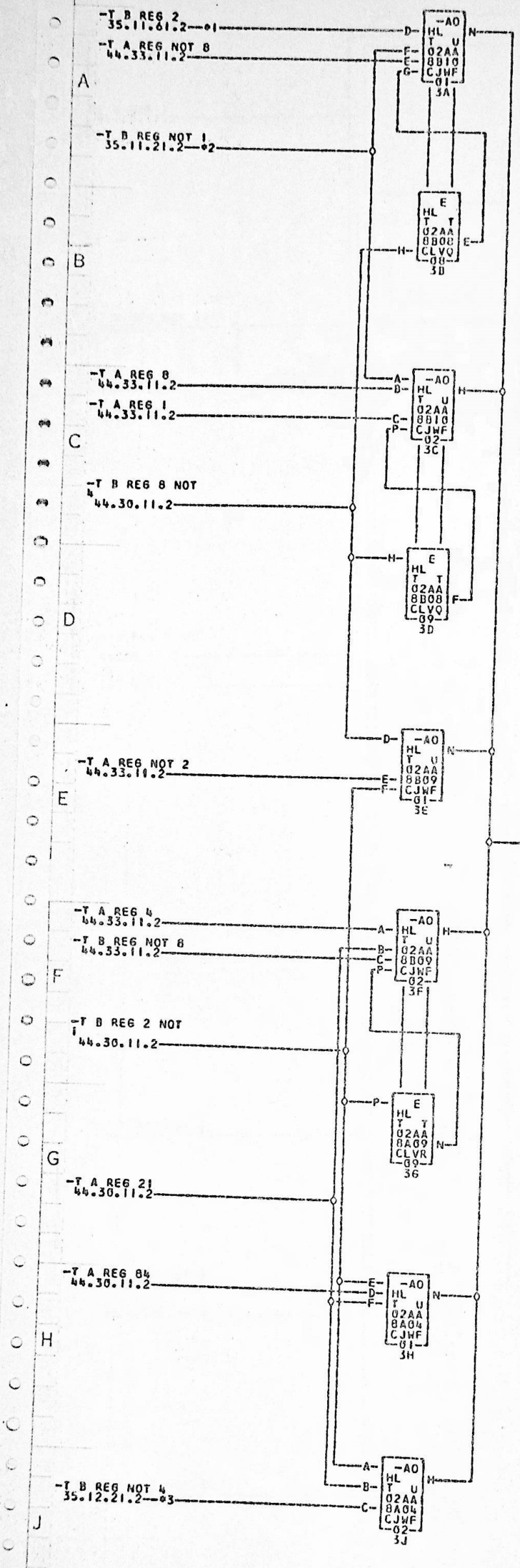


#1—02A8B26H #2—02A8B26D #3—02A8B26A

COMMENTS

| TAG | DATE | E.C.NO. | TAG | DATE | E.C.NO. | TAG | DATE | E.C.NO. | TAG | DATE | E.C.NO. |
|---|---|---|---|---|---|---|---|---|---|---|---|
| A | 06-09-61 | 110324 | | | | | | | | | |

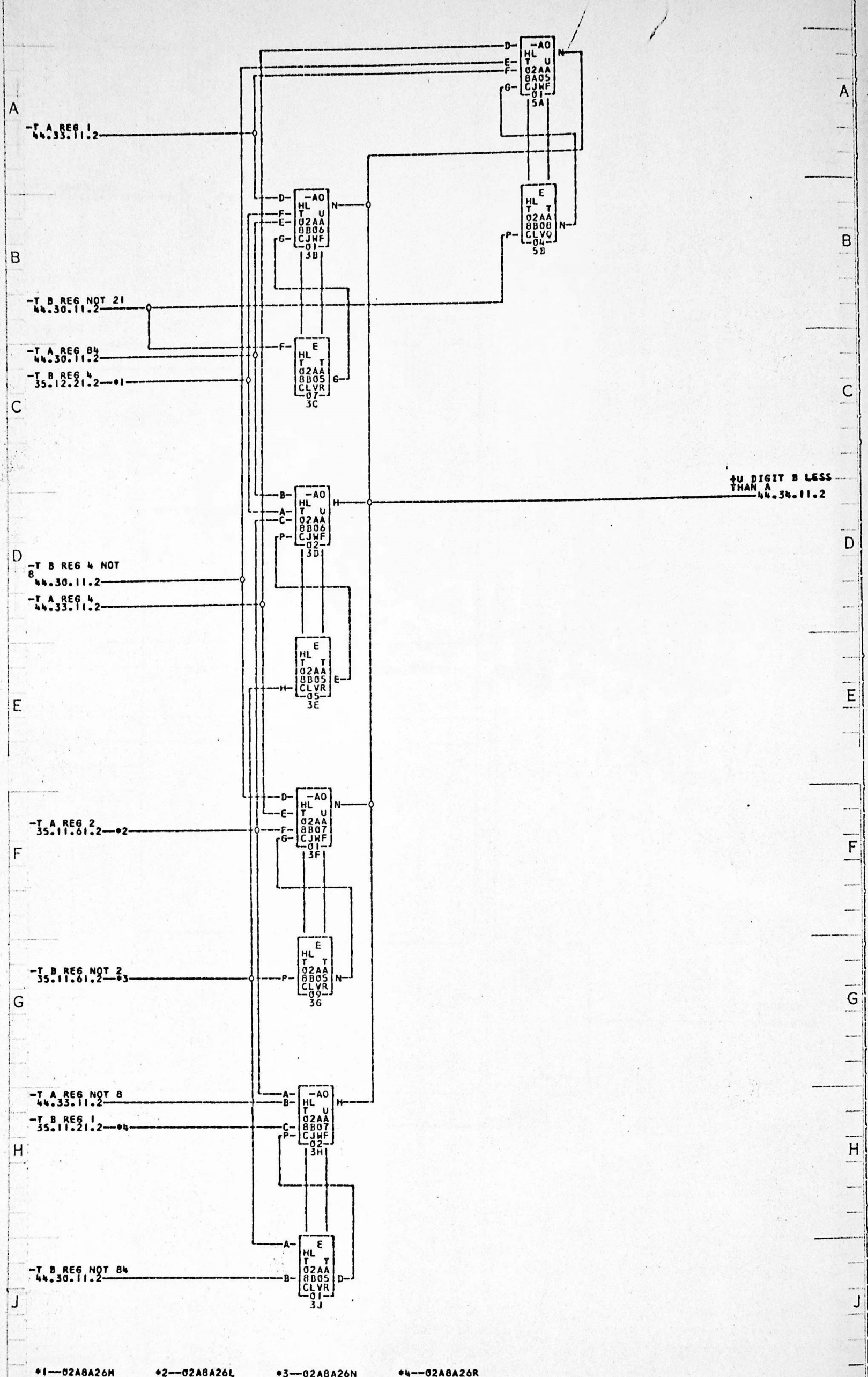


*1—02A8A26M *2—02A8A26L *3—02A8A26N *4—02A8A26R

| COMMENTS | TAG | DATE | E.C.NO. | TAG | DATE | E.C.NO. | TAG | DATE | E.C.NO. | TAG | DATE | E.C.NO. |
|---|---|---|---|---|---|---|---|---|---|---|---|---|
| | A | 06-09-61 | 110324 | | | | | | | | | |

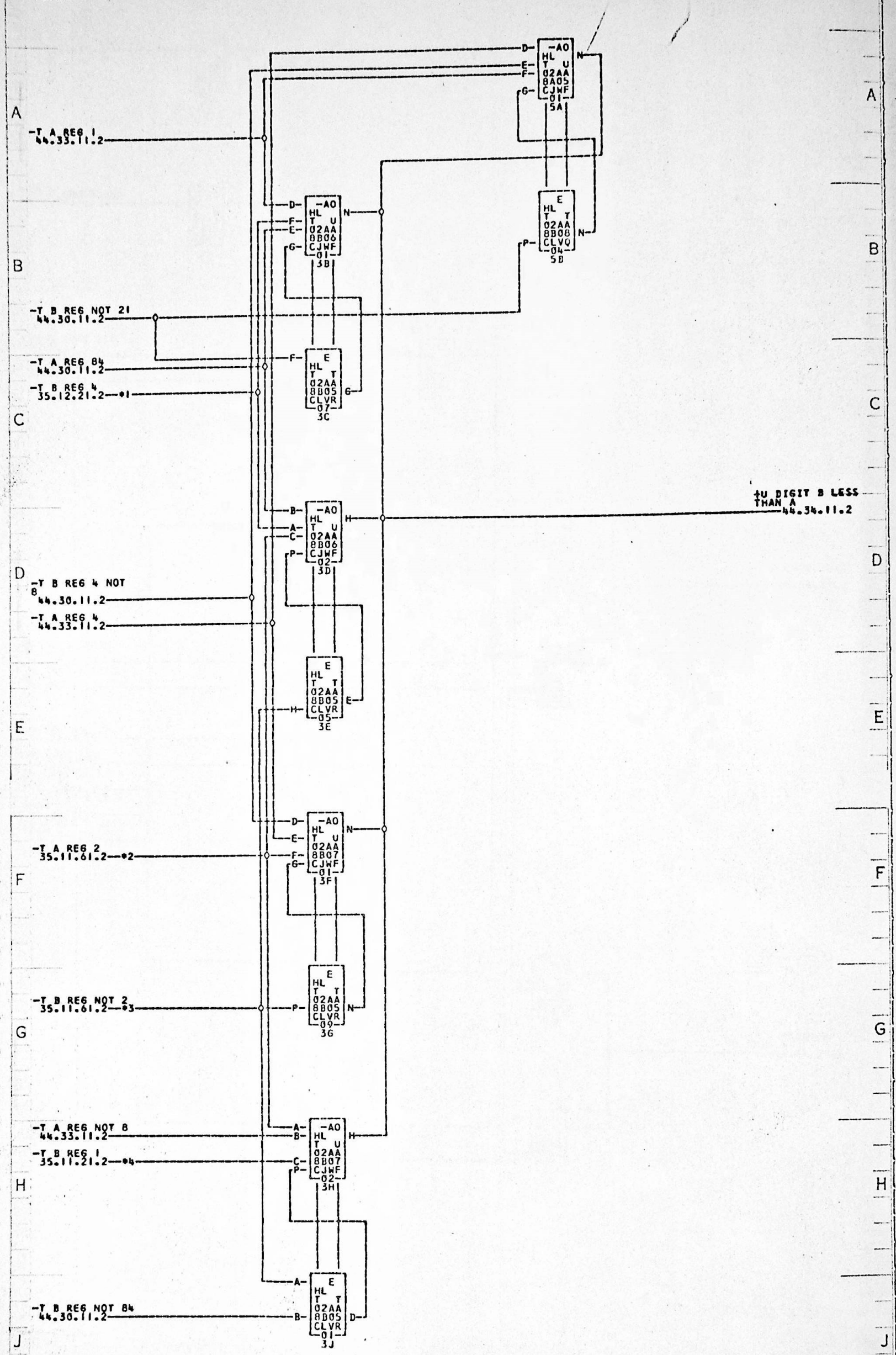


*1—02A8A26M *2—02A8A26L *3—02A8A26N *4—02A8A26R

| COMMENTS | TAG | DATE | E.C.NO. | TAG | DATE | E.C.NO. | TAG | DATE | E.C.NO. | TAG | DATE | E.C.NO. |
|---|---|---|---|---|---|---|---|---|---|---|---|---|
| | A | 06-09-61 | 110324 | | | | | | | | | |

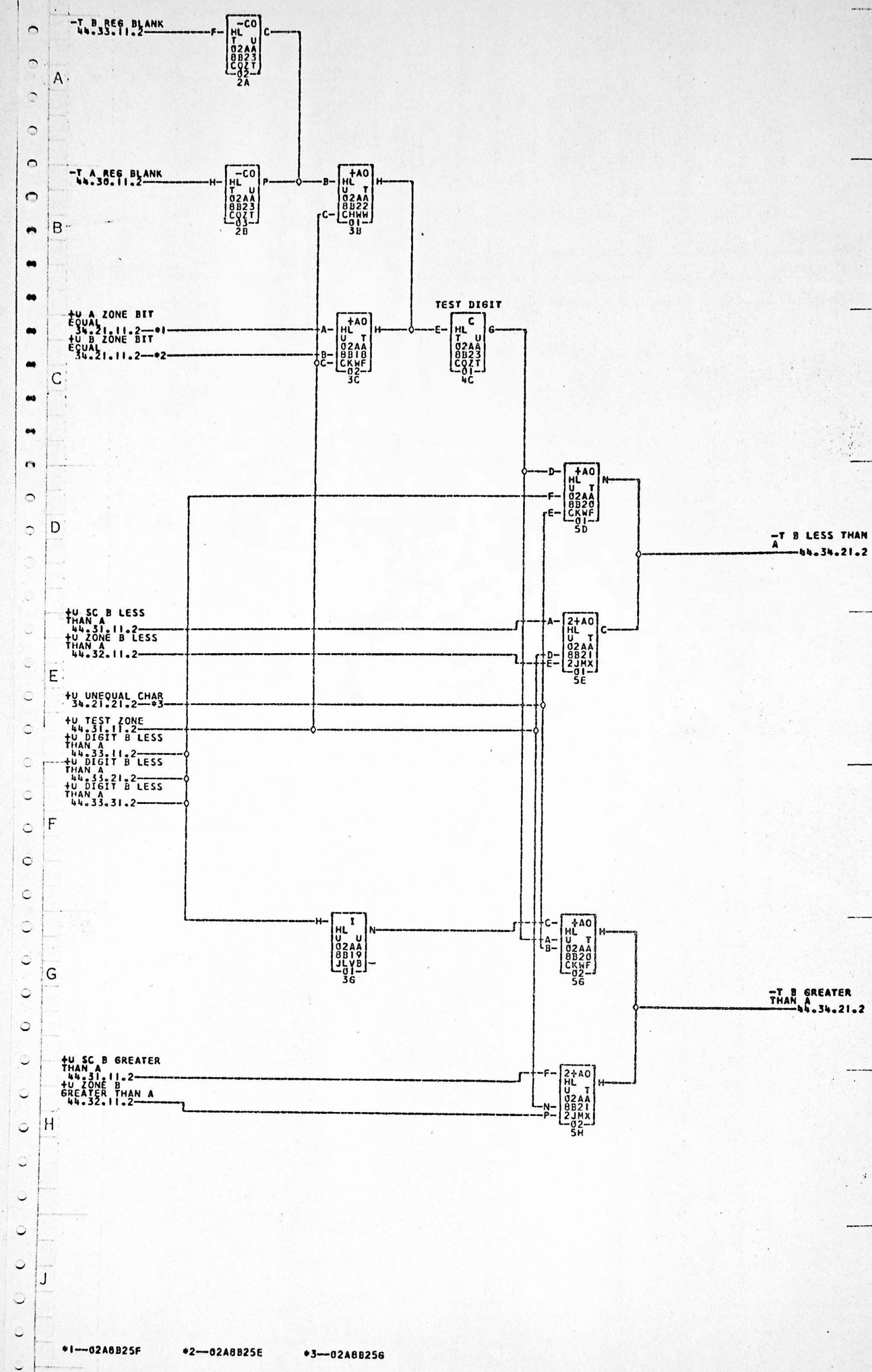


*1—02A8B25F *2—02A8B25E *3—02A8B256

| COMMENTS | TAG | DATE | E.C.NO. | TAG | DATE | E.C.NO. | TAG | DATE | E.C.NO. | TAG | DATE | E.C.NO. |
|---|---|---|---|---|---|---|---|---|---|---|---|---|
| | A | 06-09-61 | 110324 | | | | | | | | | |

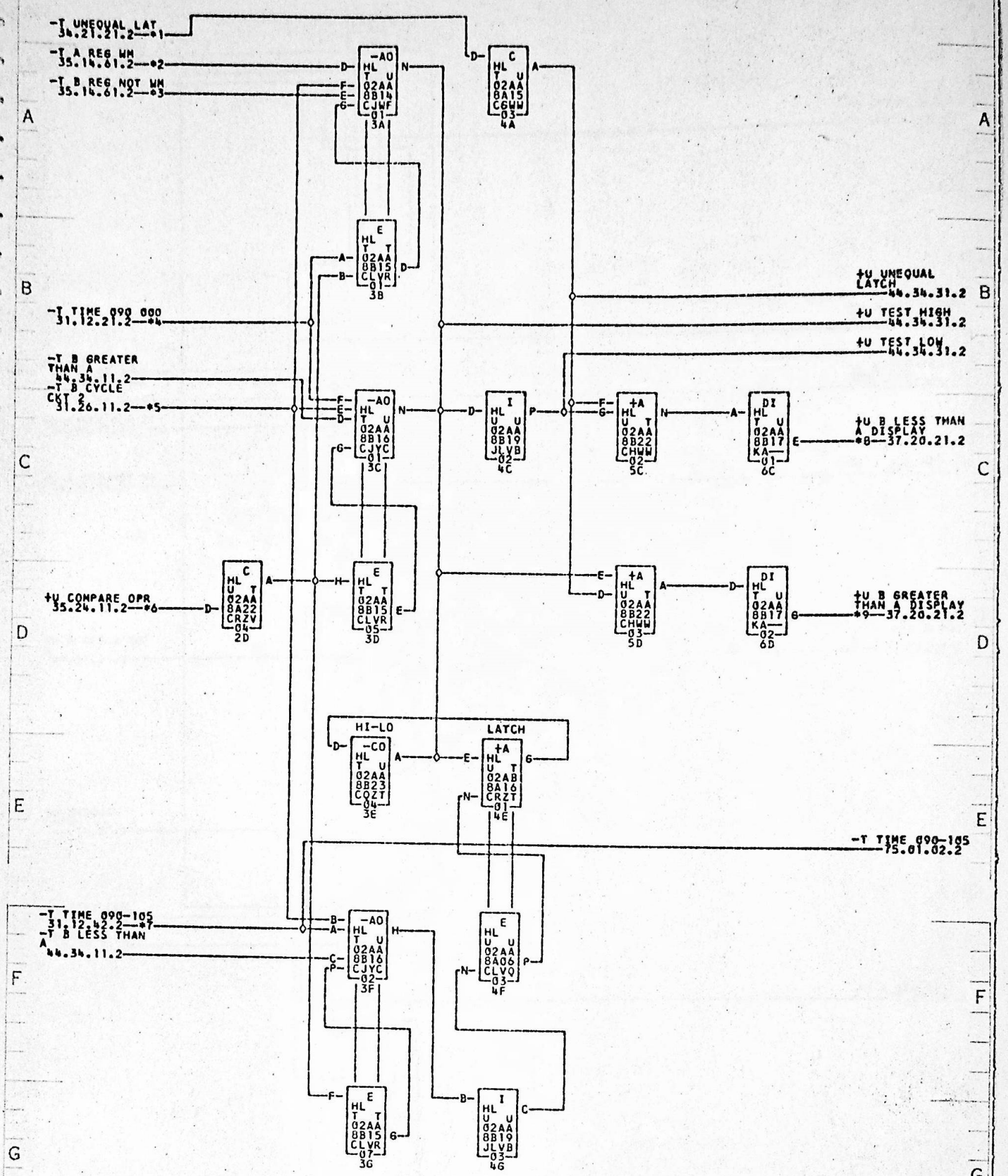


*1—02A8B25A
*7—02A8B26P
*9—02A8B25R

*2—02A8B26L
*8—02A8B25Q
02A9E05D

*3—02A8B25K
02A9E03D
01B6F03R

*4—02A8B26K
01B6F03Q
01B6A02R

*5—02A8B25C
01B6A02Q
01A2A04R

*6—02A8B25D
01A2A04Q

COMMENTS

| TAG | DATE | E.C.NO. | TAG | DATE | E.C.NO. | TAG | DATE | E.C.NO. | TAG | DATE | E.C.NO. |
|---|---|---|---|---|---|---|---|---|---|---|---|
| A | 06-09-61 | 118324 | B | 12-06-61 | 113422 | | | | | | |

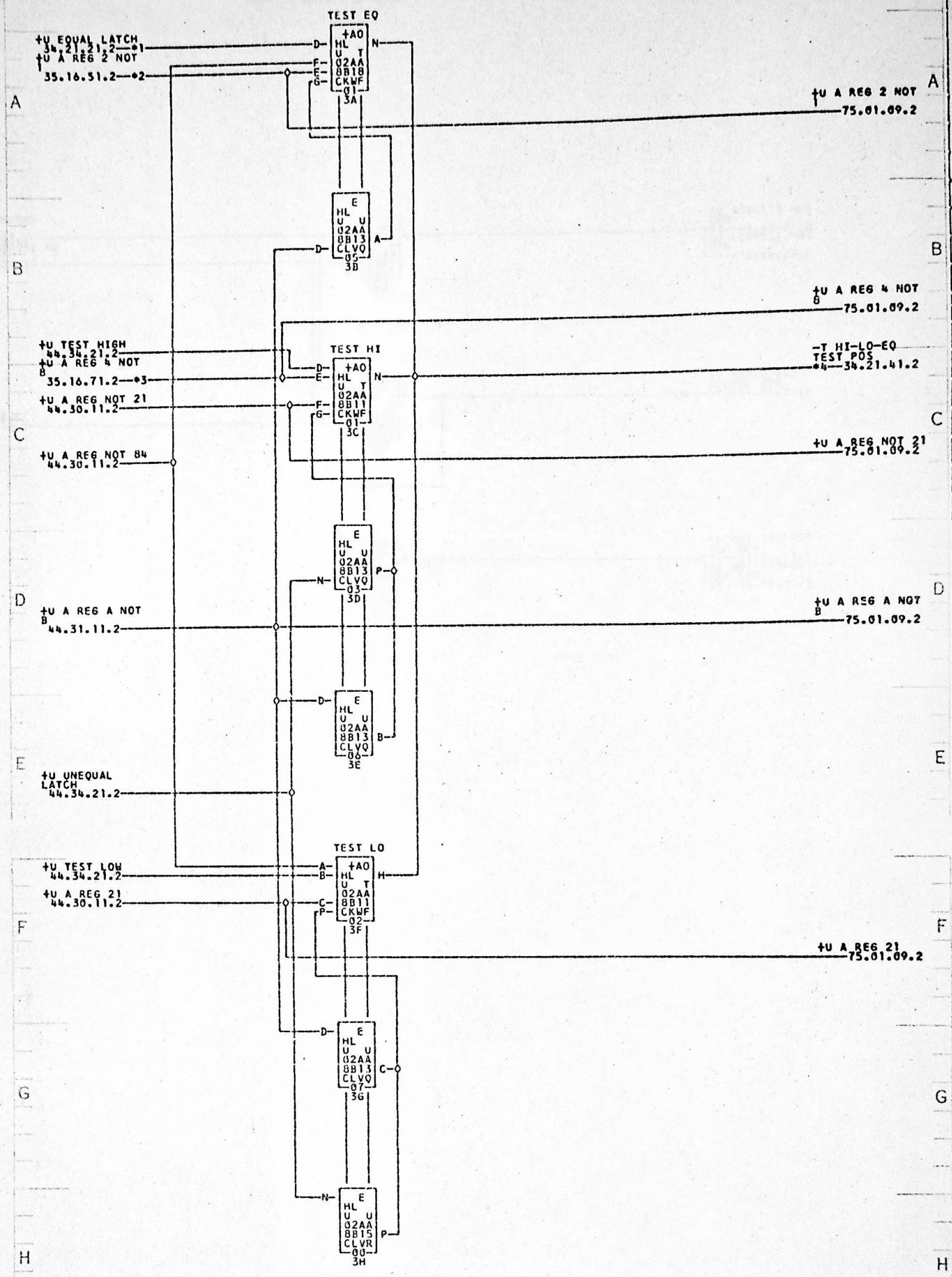


*1—02A8B25H *2—02A8B26M *3—02A8B26N *4—02A8B25B ———02A9C17D ———01B6F03B

COMMENTS

| TAG | DATE | E.C.NO. | TAG | DATE | E.C.NO. | TAG | DATE | E.C.NO. | TAG | DATE | E.C.NO. |
|---|---|---|---|---|---|---|---|---|---|---|---|
| A | 06-15-61 | 110324 | B | 12-06-61 | 113422 | | | | | | |

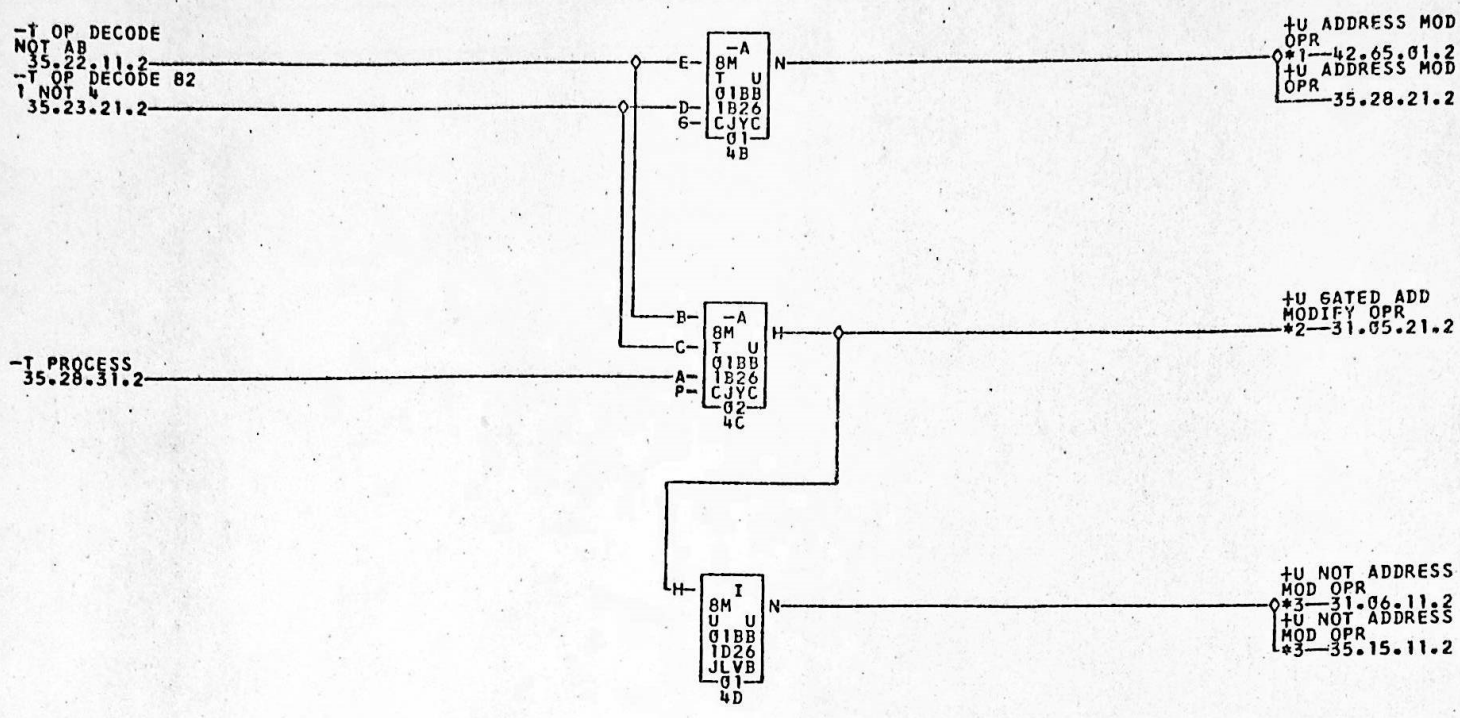


*1—01B1E02R
01B2B02K

01B3D02R
*3—01B1C01J

01B3F03N
01B2B02J

06B7A13N
01B2D04J

06B4E01N
01A3D25J

*2—01B1C01K

COMMENTS

| TAG | DATE | E.C.NO. |
|---|---|---|
| A | 06-05-61 | 110320P |
| B | 06-26-61 | 110324C |
| C | 02-27-62 | 114026 |
| D | 12-21-62 | 114052 |

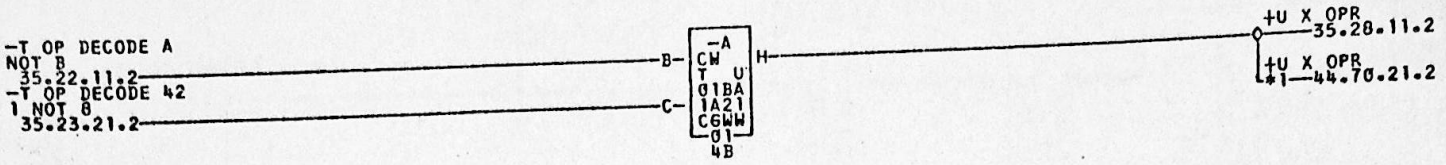


*1—01B1A03E ———02A0E17A ———02B6C03E

COMMENTS

| TAG | DATE | E.C.NO. | TAG | DATE | E.C.NO. | TAG | DATE | E.C.NO. | TAG | DATE | E.C.NO. |
|---|---|---|---|---|---|---|---|---|---|---|---|
| A | 06-05-61 | 110320P | B | 08-09-62 | 114040 | | | | | | |

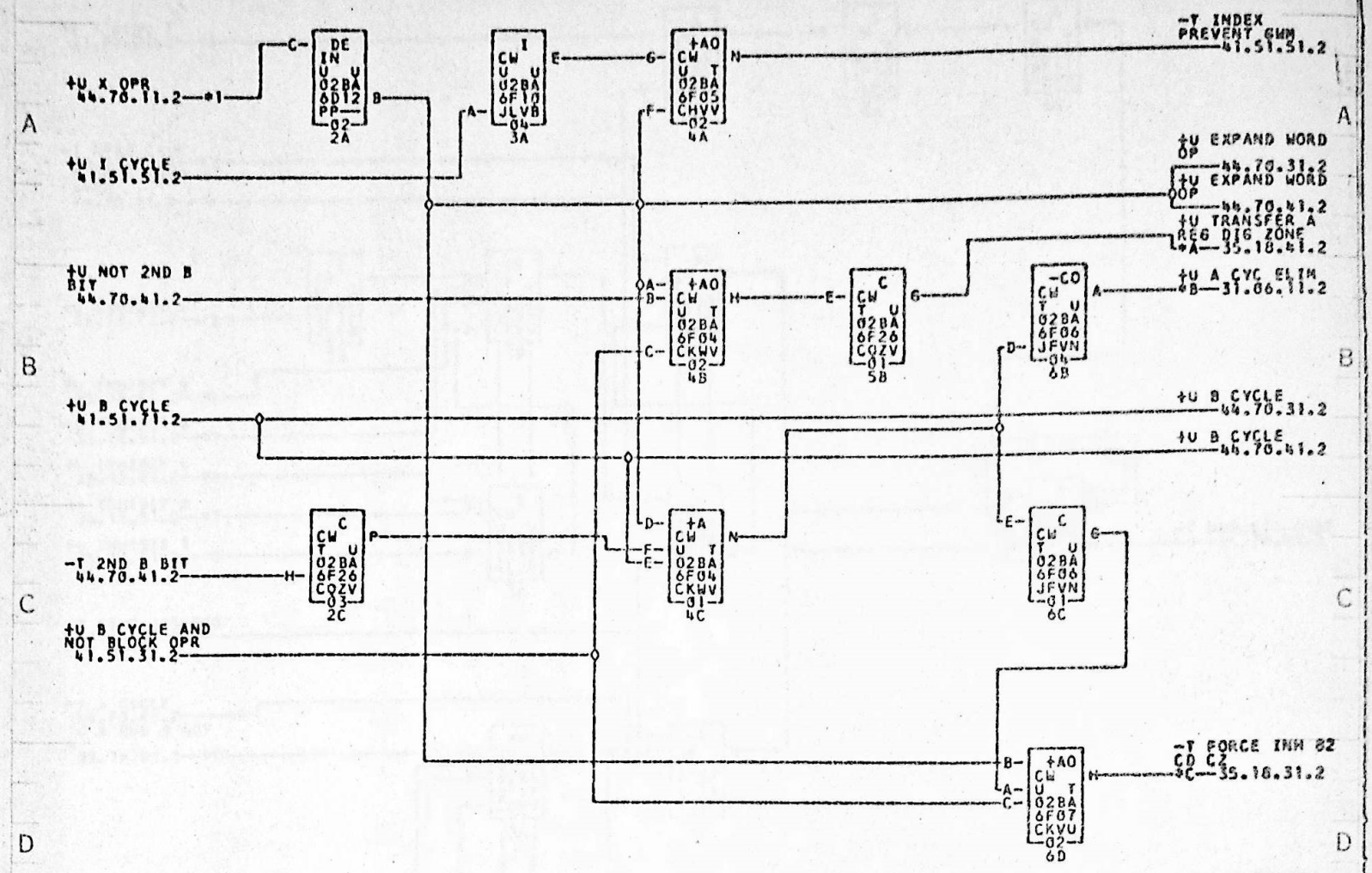


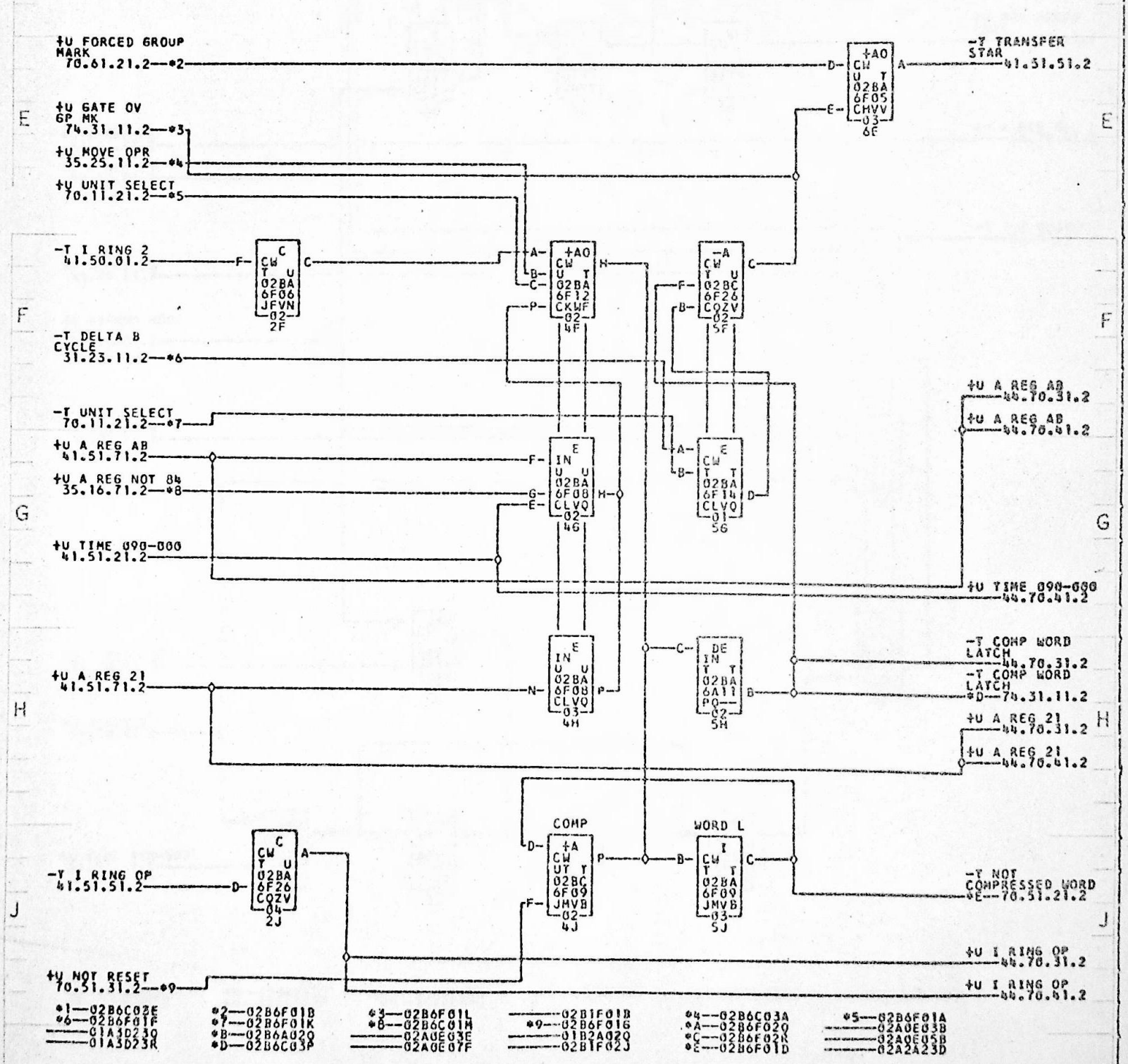


COMMENTS

| TAG | DATE | E.C.NO. | TAG | DATE | E.C.NO. | TAG | DATE | E.C.NO. | TAG | DATE | E.C.NO. |
|---|---|---|---|---|---|---|---|---|---|---|---|
| A | 06-08-61 | 110320H | B | 07-19-61 | 110324P | C | 12-06-61 | 113422 | | | |

IBM FORM 624-9015-1

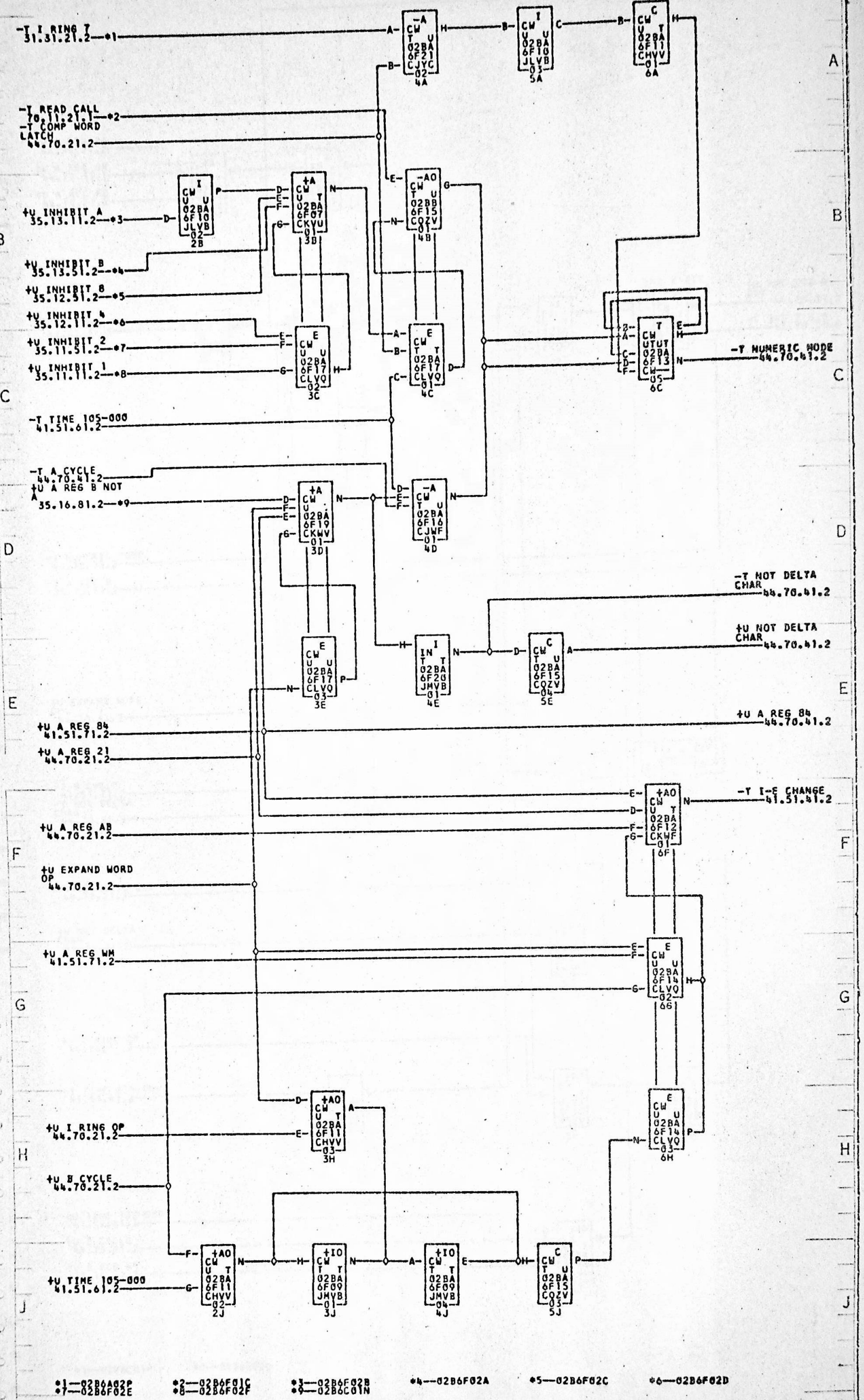


| COMMENTS | TAG | DATE | E.C.NO. | TAG | DATE | E.C.NO. | TAG | DATE | E.C.NO. | TAG | DATE | E.C.NO. |
|---|---|---|---|---|---|---|---|---|---|---|---|---|
| | A | 06-08-61 | 110320M | B | 12-06-61 | 113422 | | | | | | |

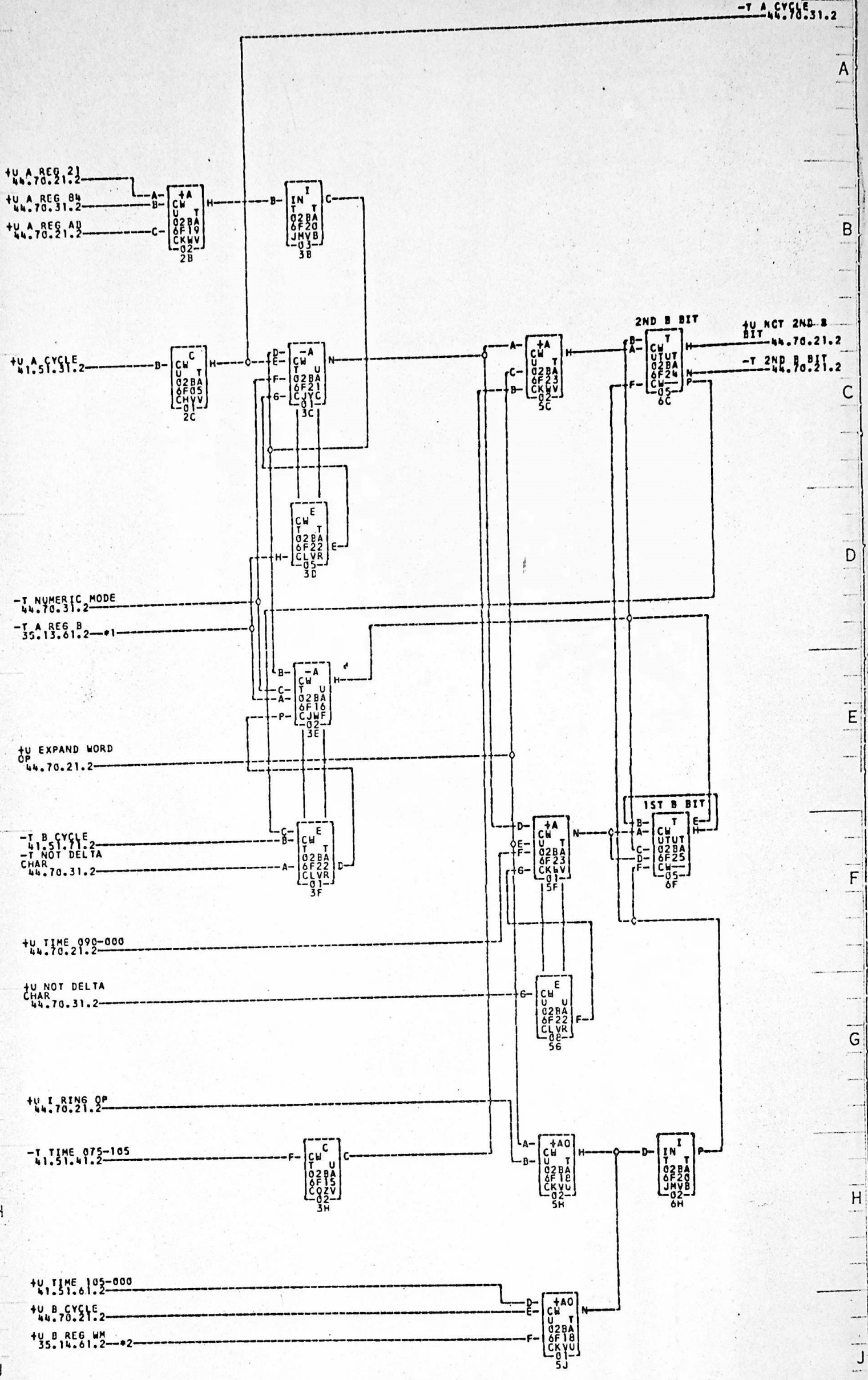


| COMMENTS | TAG | DATE | E.C.NO. | TAG | DATE | E.C.NO. | TAG | DATE | E.C.NO. | TAG | DATE | E.C.NO. |
|---|---|---|---|---|---|---|---|---|---|---|---|---|
| | A | 06-08-61 | 1103201 | B | 07-19-61 | 1103241 | | | | | | |

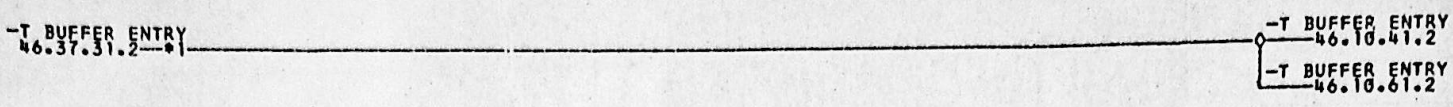


*1—01A4F25K

COMMENTS

| TAG | DATE | E.C.NO. | TAG | DATE | E.C.NO. | TAG | DATE | E.C.NO. | TAG | DATE | E.C.NO. |
|---|---|---|---|---|---|---|---|---|---|---|---|
| A | 09-06-60 | 109501 | B | 12-07-62 | 116739 | | | | | | |

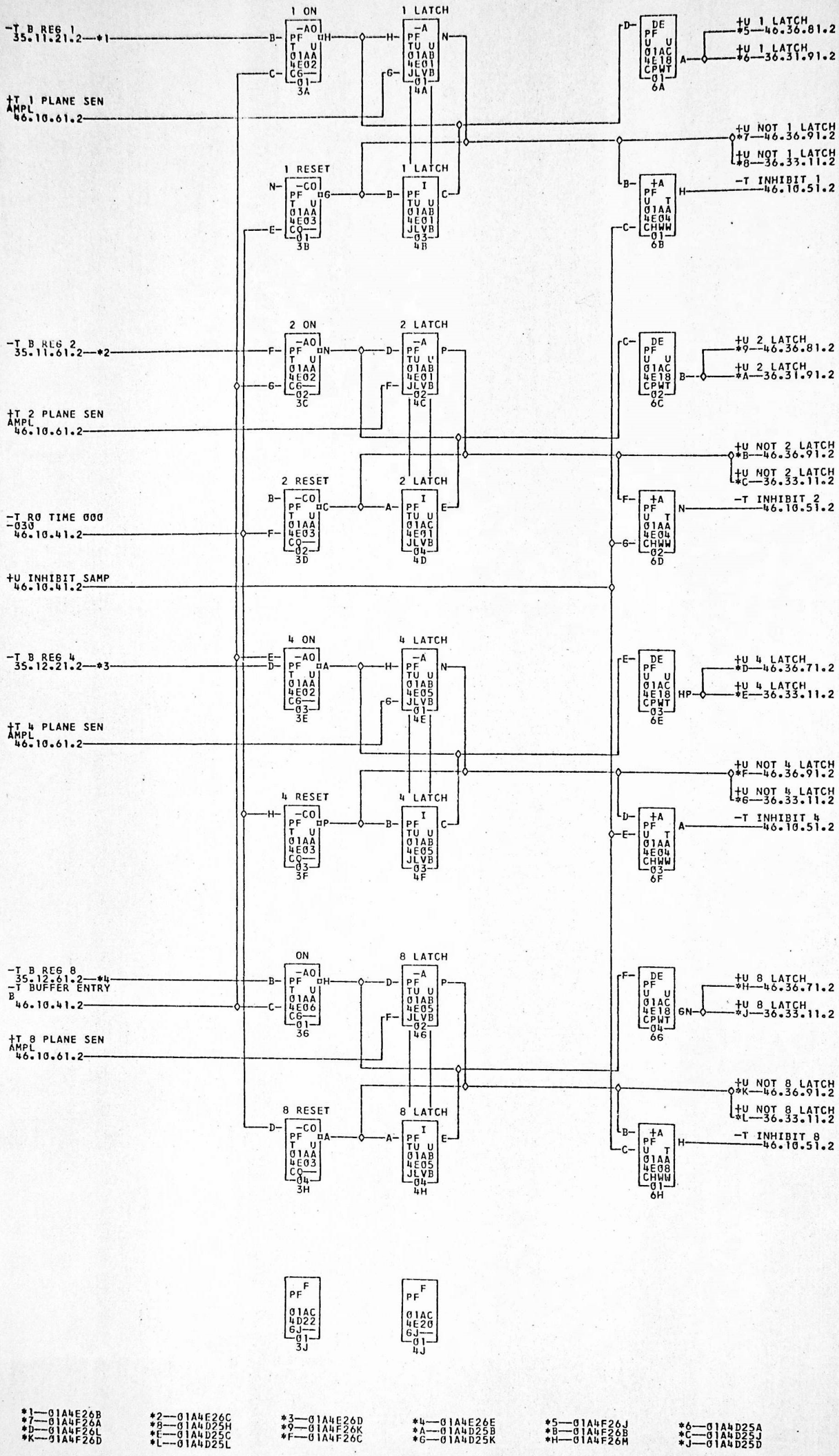


*1—01A4E26B
*7—01A4F26A
*D—01A4F26L
*K—01A4F26D

*2—01A4E26C
*8—01A4D25H
*E—01A4D25C
*L—01A4D25L

*3—01A4E26D
*9—01A4F26K
*F—01A4F26C

*4—01A4E26E
*A—01A4D25B
*G—01A4D25K

*5—01A4F26J
*B—01A4F26B
*H—01A4F26M

*6—01A4D25A
*C—01A4D25J
*J—01A4D25D

COMMENTS

| TAG | DATE | E.C.NO. | TAG | DATE | E.C.NO. | TAG | DATE | E.C.NO. | TAG | DATE | E.C.NO. |
|---|---|---|---|---|---|---|---|---|---|---|---|
| A | 09-06-60 | 109501 | B | 12-01-61 | 113422 | C | 12-07-62 | 116739 | | | |

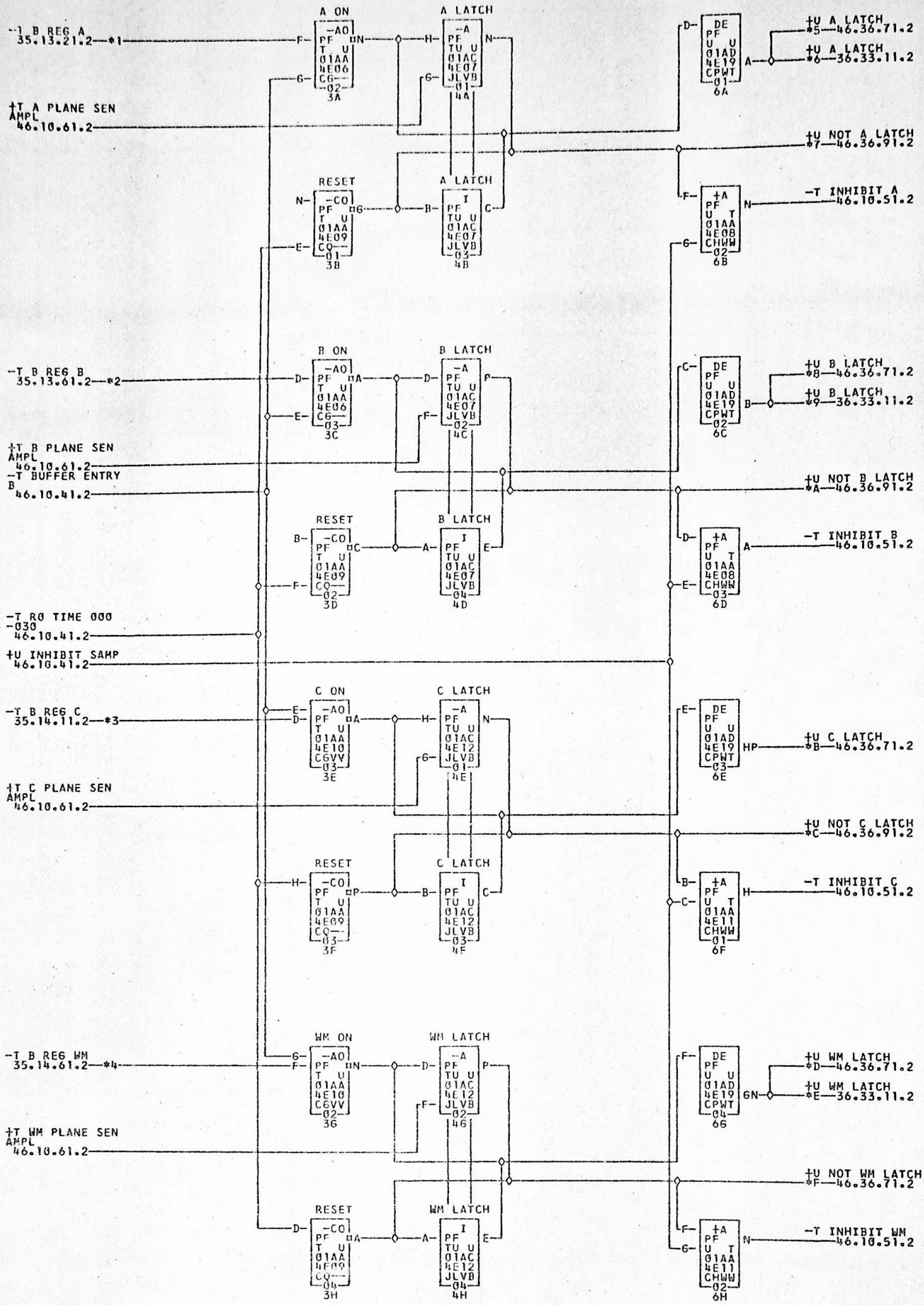


*1—01A4E26F *2—01A4E26G *3—01A4E26H *4—01A4E26J *5—01A4F26N *6—01A4D25E
*7—01A4F26E *8—01A4F26P *9—01A4D25F *A—01A4F26F *B—01A4F26Q *C—01A4F26G
*D—01A4F26R *E—01A4D25G *F—01A4F26H

COMMENTS

| TAG | DATE | E.C.NO. | TAG | DATE | E.C.NO. | TAG | DATE | E.C.NO. | TAG | DATE | E.C.NO. |
|---|---|---|---|---|---|---|---|---|---|---|---|
| A | 09-06-60 | 109501 | B | 03-08-61 | 110431B | C | 12-01-61 | 113422 | D | 12-07-62 | 116739 |

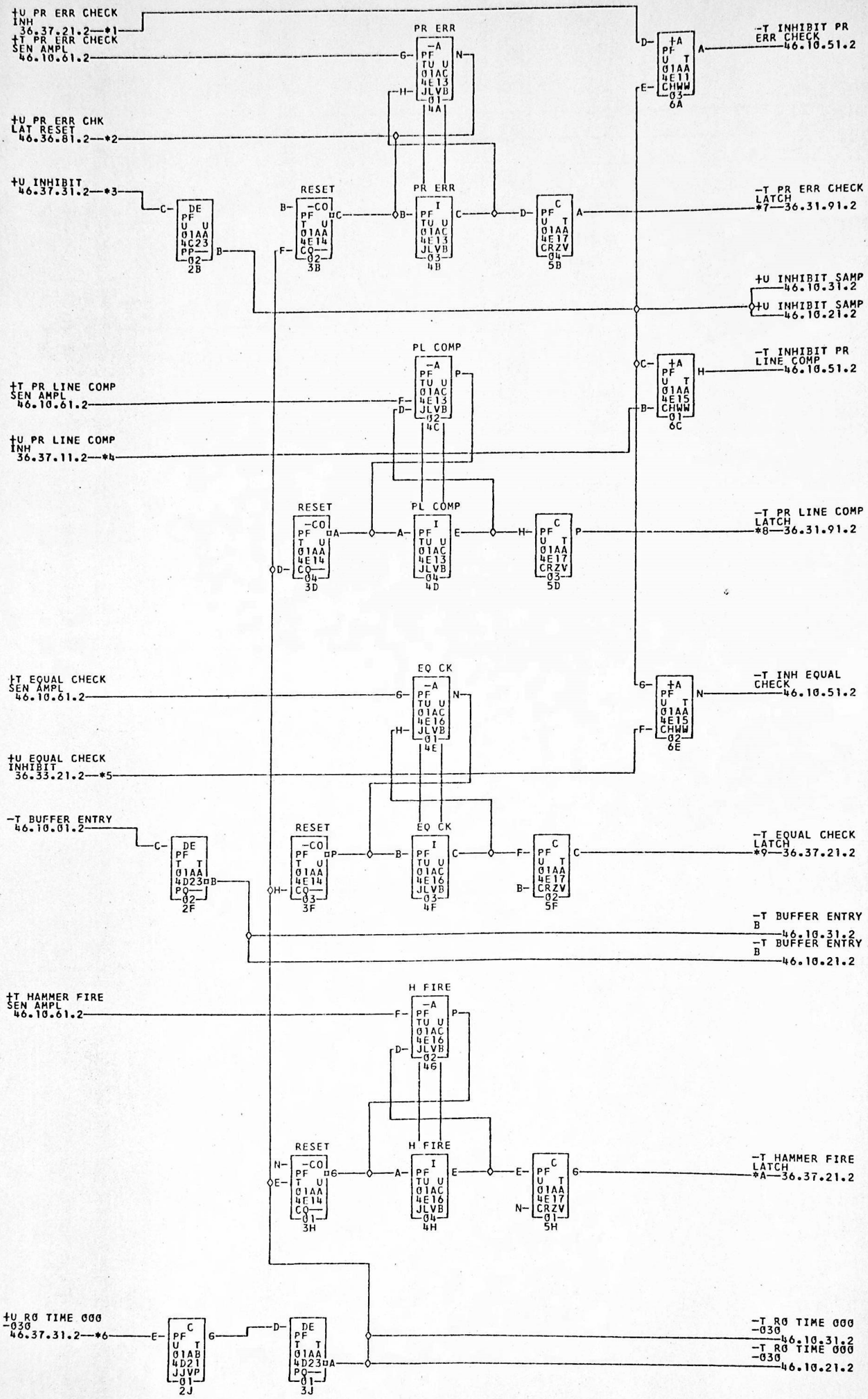


*1—01A4F25Q *2—01A4E25R *3—01A4F25L *4—01A4E25J *5—01A4D25R *6—01A4F25J
*7—01A4D25M *8—01A4D25N *9—01A4D25P *A—01A4D25Q

COMMENTS

| TAG | DATE | E.C.NO. | TAG | DATE | E.C.NO. | TAG | DATE | E.C.NO. | TAG | DATE | E.C.NO. |
|---|---|---|---|---|---|---|---|---|---|---|---|
| A | 09-06-60 | 109501 | B | 11-30-60 | 1104139 | C | 12-01-61 | 113422 | D | 12-07-62 | 116739 |

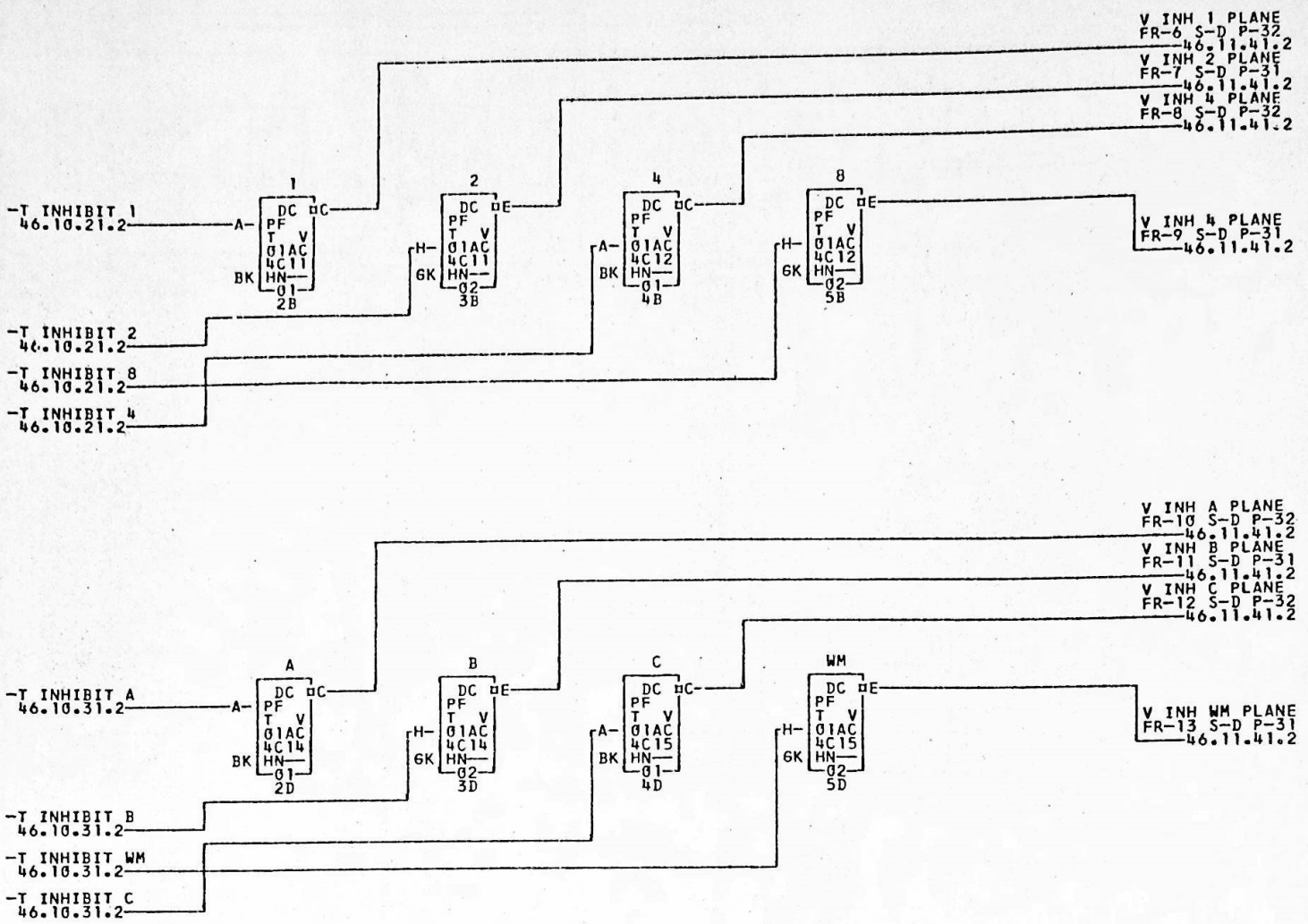


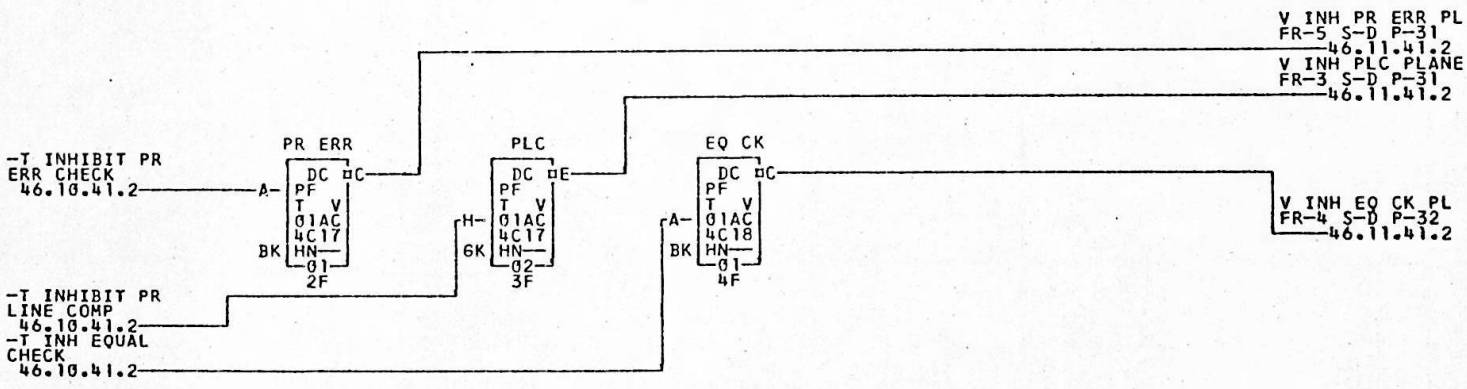


COMMENTS
FR MEANS FRAME S MEANS SIDE P MEANS PIN OR TERM

| TAG | DATE | E.C.NO. | TAG | DATE | E.C.NO. | TAG | DATE | E.C.NO. | TAG | DATE | E.C.NO. |
|---|---|---|---|---|---|---|---|---|---|---|---|
| A | 09-06-60 | 109501 | B | 10-21-60 | 109520 | C | 12-07-62 | 116739 | | | |

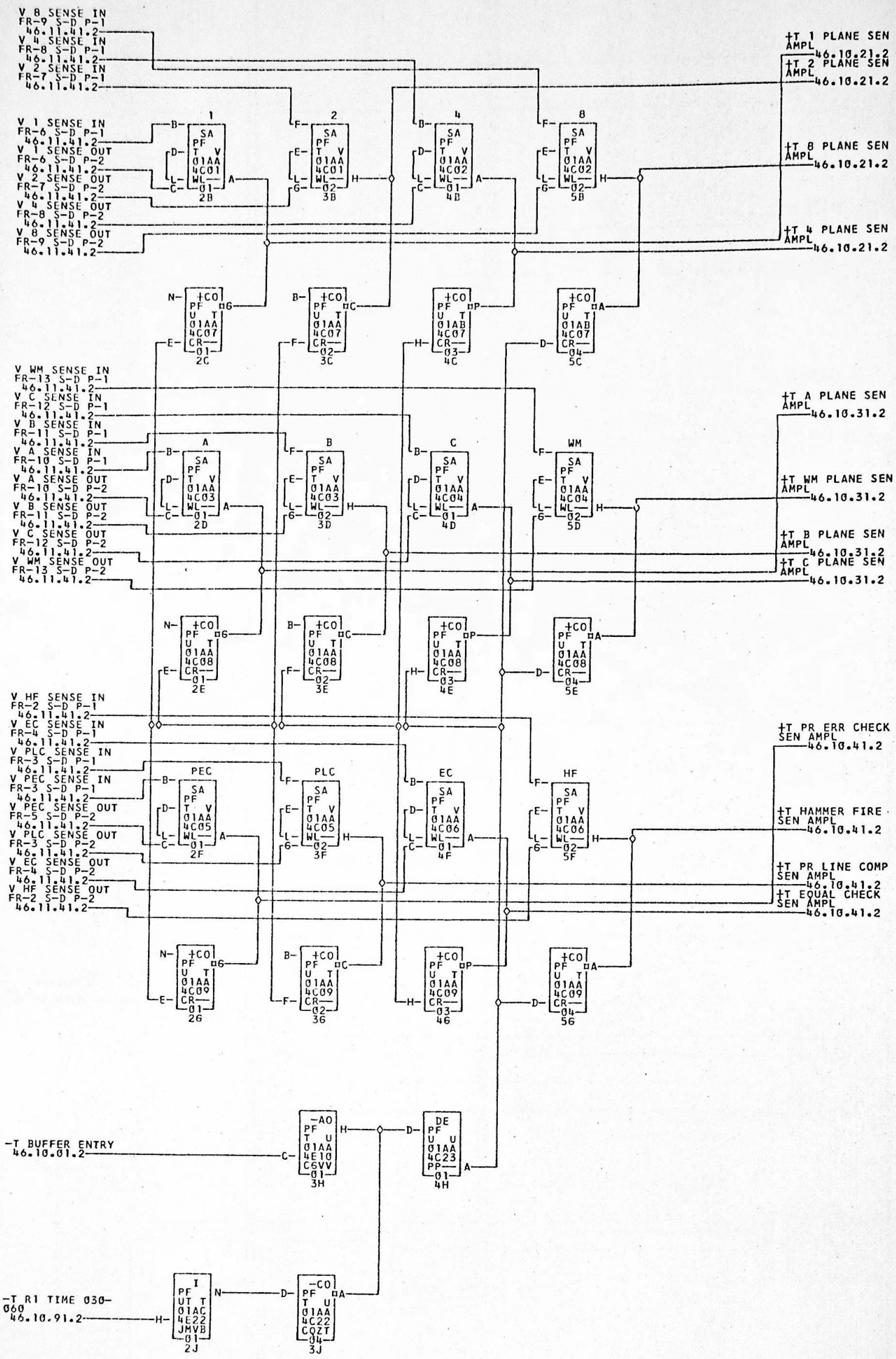


| COMMENTS | TAG | DATE | E.C.NO. | TAG | DATE | E.C.NO. | TAG | DATE | E.C.NO. | TAG | DATE | E.C.NO. |
|---|---|---|---|---|---|---|---|---|---|---|---|---|
| FR MEANS FRAME S MEANS SIDE P MEANS PIN OR TERMINAL | A | 09-06-60 | 109501 | B | 10-21-60 | 109520 | C | 12-01-61 | 113422 | D | 12-07-62 | 116739 |

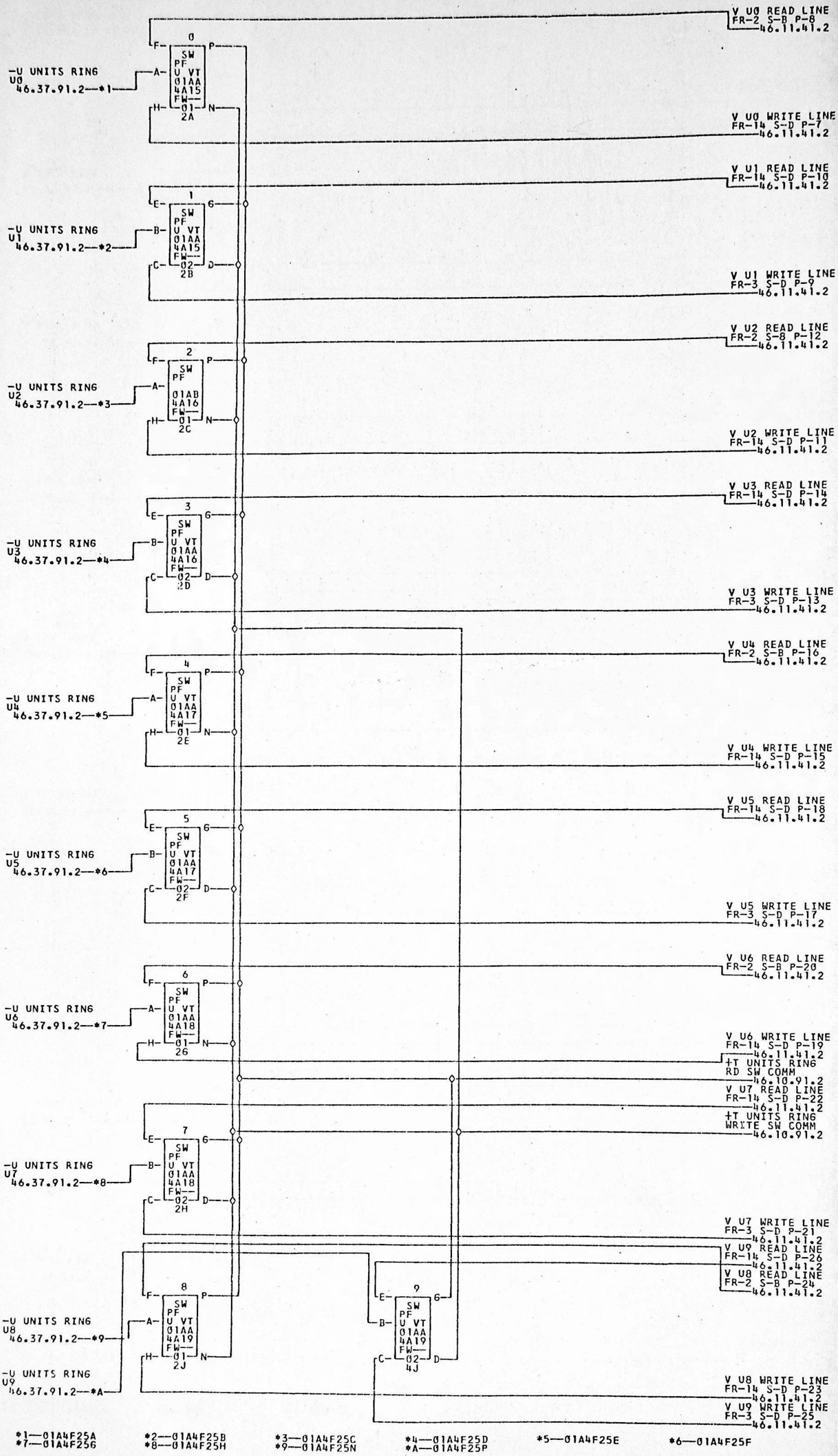


*1—01A4F25A *2—01A4F25B *3—01A4F25C *4—01A4F25D *5—01A4F25E *6—01A4F25F
*7—01A4F25G *8—01A4F25H *9—01A4F25N *A—01A4F25P

COMMENTS
FR MEANS FRAME S MEANS SIDE P MEANS PIN OR TERMINAL

| TAG | DATE | E.C.NO. |
|---|---|---|
| A | 09-06-60 | 109501 |
| B | 10-21-60 | 109520 |
| C | 03-08-61 | 110431B |
| D | 12-07-62 | 116739 |

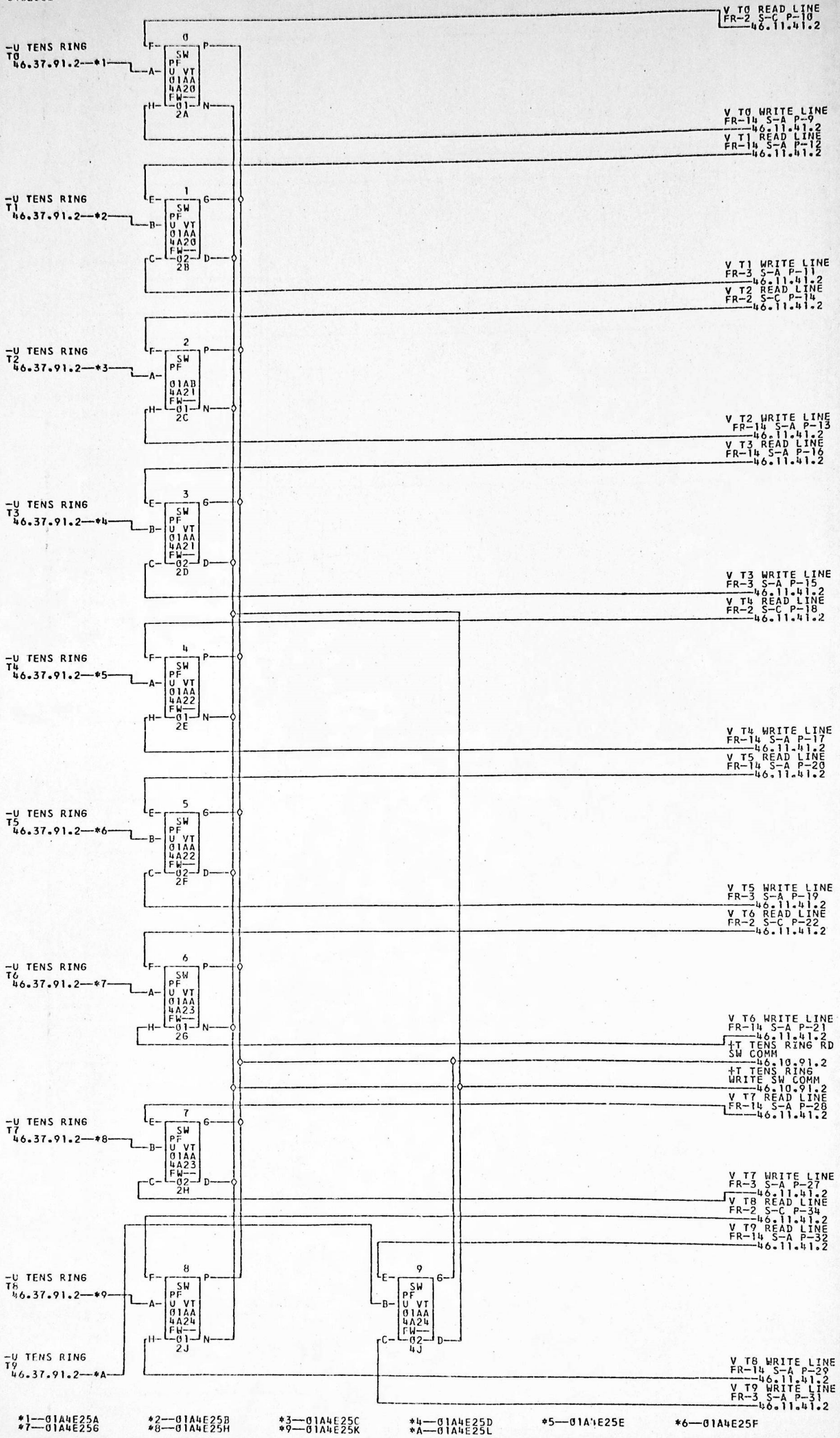


*1—01A4E25A *2—01A4E25B *3—01A4E25C *4—01A4E25D *5—01A4E25E *6—01A4E25F
*7—01A4E25G *8—01A4E25H *9—01A4E25K *A—01A4E25L

COMMENTS
FR MEANS FRAME S MEANS SIDE P MEANS PIN OR TERMINAL

| TAG | DATE | E.C.NO. | TAG | DATE | E.C.NO. | TAG | DATE | E.C.NO. | TAG | DATE | E.C.NO. |
|---|---|---|---|---|---|---|---|---|---|---|---|
| A | 09-06-60 | 109501 | B | 10-21-60 | 109520 | C | 12-07-62 | 116739 | | | |

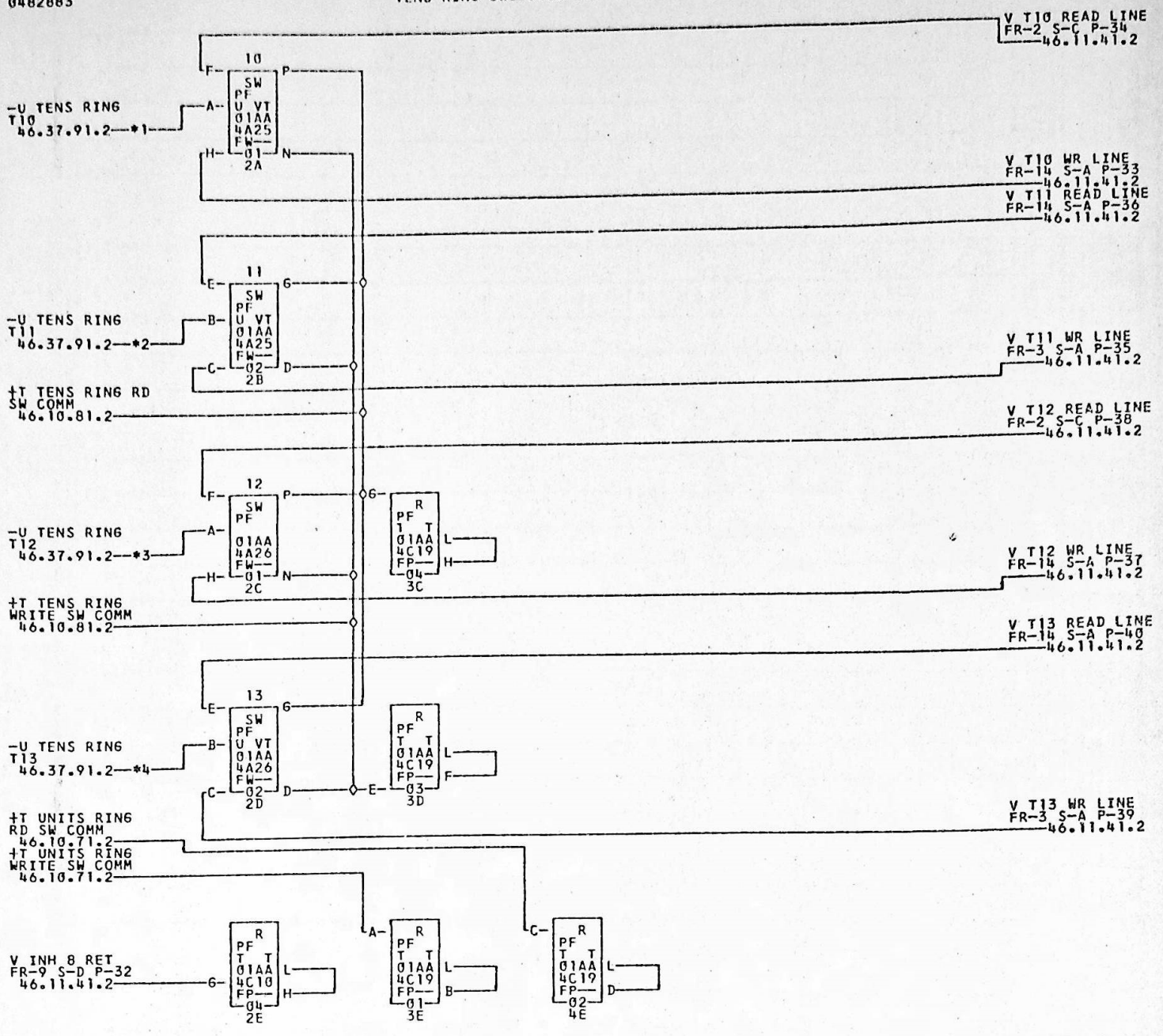


COMMENTS

FR MEANS FRAME
S MEANS SIDE
P MEANS PIN OR TERMINAL

| TAG | DATE | E.C.NO. | TAG | DATE | E.C.NO. | TAG | DATE | E.C.NO. | TAG | DATE | E.C.NO. |
|---|---|---|---|---|---|---|---|---|---|---|---|
| A | 09-06-60 | 109501 | B | 10-21-60 | 109520 | C | 11-30-60 | 110413B | D | 12-01-61 | 113422 |
| E | 12-07-62 | 116739 | | | | | | | | | |

| | | |
|---|---|---|
| V HAMMER 1 | | V FR 1 SIDE D |
| RESPONSE | | PIN 5 |
| 36.38.61.2 | *1 | 46.11.41.2 |
| V HAMMER 2 | | V FR 1 SIDE D |
| RESPONSE | | PIN 8 |
| 36.38.61.2 | *2 | 46.11.41.2 |
| V HAMMER 3 | | V FR 1 SIDE D |
| RESPONSE | | PIN 11 |
| 36.38.61.2 | *3 | 46.11.41.2 |
| V HAMMER 4 | | V FR 1 SIDE D |
| RESPONSE | | PIN 14 |
| 36.38.61.2 | *4 | 46.11.41.2 |
| V HAMMER 5 | | V FR 1 SIDE D |
| RESPONSE | | PIN 17 |
| 36.38.61.2 | *5 | 46.11.41.2 |
| V HAMMER 6 | | V FR 1 SIDE D |
| RESPONSE | | PIN 20 |
| 36.38.61.2 | *6 | 46.11.41.2 |
| V HAMMER 7 | | V FR 1 SIDE D |
| RESPONSE | | PIN 23 |
| 36.38.61.2 | *7 | 46.11.41.2 |
| V HAMMER 8 | | V FR 1 SIDE D |
| RESPONSE | | PIN 26 |
| 36.38.61.2 | *8 | 46.11.41.2 |
| V HAMMER 9 | | V FR 1 SIDE D |
| RESPONSE | | PIN 29 |
| 36.38.61.2 | *9 | 46.11.41.2 |
| V HAMMER 10 | | V FR 1 SIDE D |
| RESPONSE | | PIN 2 |
| 36.38.71.2 | *A | 46.11.41.2 |
| V HAMMER 11 | | V FR 1 SIDE D |
| RESPONSE | | PIN 6 |
| 36.38.71.2 | *B | 46.11.41.2 |
| V HAMMER 12 | | V FR 1 SIDE D |
| RESPONSE | | PIN 9 |
| 36.38.71.2 | *C | 46.11.41.2 |
| V HAMMER 13 | | V FR 1 SIDE D |
| RESPONSE | | PIN 12 |
| 36.38.71.2 | *D | 46.11.41.2 |
| V HAMMER 14 | | V FR 1 SIDE D |
| RESPONSE | | PIN 15 |
| 36.38.71.2 | *E | 46.11.41.2 |
| V HAMMER 15 | | V FR 1 SIDE D |
| RESPONSE | | PIN 18 |
| 36.38.71.2 | *F | 46.11.41.2 |
| V HAMMER 16 | | V FR 1 SIDE D |
| RESPONSE | | PIN 21 |
| 36.38.71.2 | *G | 46.11.41.2 |
| V HAMMER 17 | | V FR 1 SIDE D |
| RESPONSE | | PIN 24 |
| 36.38.71.2 | *H | 46.11.41.2 |
| V HAMMER 18 | | V FR 1 SIDE D |
| RESPONSE | | PIN 27 |
| 36.38.71.2 | *J | 46.11.41.2 |
| V HAMMER 19 | | V FR 1 SIDE D |
| RESPONSE | | PIN 31 |
| 36.38.71.2 | *K | 46.11.41.2 |
| V HAMMER 20 | | V FR 1 SIDE D |
| RESPONSE | | PIN 3 |
| 36.38.81.2 | *L | 46.11.41.2 |
| V HAMMER 21 | | V FR 1 SIDE D |
| RESPONSE | | PIN 7 |
| 36.38.81.2 | *M | 46.11.41.2 |
| V HAMMER 22 | | V FR 1 SIDE D |
| RESPONSE | | PIN 10 |
| 36.38.81.2 | *N | 46.11.41.2 |
| V HAMMER 23 | | V FR 1 SIDE D |
| RESPONSE | | PIN 13 |
| 36.38.81.2 | *P | 46.11.41.2 |
| V HAMMER 24 | | V FR 1 SIDE D |
| RESPONSE | | PIN 16 |
| 36.38.81.2 | *Q | 46.11.41.2 |
| V HAMMER 25 | | V FR 1 SIDE D |
| RESPONSE | | PIN 19 |
| 36.38.81.2 | *R | 46.11.41.2 |
| V HAMMER 26 | | V FR 1 SIDE D |
| RESPONSE | | PIN 22 |
| 36.38.81.2 | *S | 46.11.41.2 |
| V HAMMER 27 | | V FR 1 SIDE D |
| RESPONSE | | PIN 25 |
| 36.38.81.2 | *T | 46.11.41.2 |
| V HAMMER 28 | | V FR 1 SIDE D |
| RESPONSE | | PIN 28 |
| 36.38.81.2 | *U | 46.11.41.2 |
| V HAMMER 29 | | V FR 1 SIDE D |
| RESPONSE | | PIN 32 |
| 36.38.81.2 | *V | 46.11.41.2 |
| V HAMMER 30 | | V FR 1 SIDE D |
| RESPONSE | | PIN 5 |
| 36.38.91.2 | *W | 46.11.41.2 |
| V HAMMER 31 | | V FR 1 SIDE D |
| RESPONSE | | PIN 6 |
| 36.38.91.2 | *X | 46.11.41.2 |
| V HAMMER 32 | | V FR 1 SIDE D |
| RESPONSE | | PIN 7 |
| 36.38.91.2 | *Y | 46.11.41.2 |
| V HAMMER 33 | | V FR 1 SIDE D |
| RESPONSE | | PIN 8 |
| 36.38.91.2 | *Z | 46.11.41.2 |

| | | | | | |
|---|---|---|---|---|---|
| *1—01A4A01A | *2—01A4A02A | *3—01A4A03A | *4—01A4A04A | *5—01A4A05A | *6—01A4A06A |
| *7—01A4A07A | *8—01A4A08A | *9—01A4A09A | *A—01A4A01R | *B—01A4A01B | *C—01A4A02B |
| *D—01A4A03B | *E—01A4A04B | *F—01A4A05B | *G—01A4A06B | *H—01A4A07B | *J—01A4A08B |
| *K—01A4A09B | *L—01A4A02R | *M—01A4A01C | *N—01A4A02C | *P—01A4A03C | *Q—01A4A04C |
| *R—01A4A05C | *S—01A4A06C | *T—01A4A07C | *U—01A4A08C | *V—01A4A09C | *W—01A4A03Q |
| *X—01A4A01D | *Y—01A4A02D | *Z—01A4A03D | | | |

COMMENTS

| TAG | DATE | E.C.NO. | TAG | D | E | E.C.NO. | TAG | DATE | E.C.NO. | TAG | DATE | E.C.NO. |
|---|---|---|---|---|---|---|---|---|---|---|---|---|
| A | 09-06-60 | 109501 | B | 12- | -62 | 116739 | | | | | | |

| | | |
|---|---|---|
| V HAMMER 34 | | V FR 1 SIDE A PIN 9 |
| RESPONSE 36.38.91.2 | *1 | 46.11.41.2 |
| V HAMMER 35 | | V FR 1 SIDE C PIN 9 |
| RESPONSE 36.38.91.2 | *2 | 46.11.41.2 |
| V HAMMER 36 | | V FR 1 SIDE C PIN 8 |
| RESPONSE 36.38.91.2 | *3 | 46.11.41.2 |
| V HAMMER 37 | | V FR 1 SIDE C PIN 7 |
| RESPONSE 36.38.91.2 | *4 | 46.11.41.2 |
| V HAMMER 38 | | V FR 1 SIDE C PIN 6 |
| RESPONSE 36.38.91.2 | *5 | 46.11.41.2 |
| V HAMMER 39 | | V FR 1 SIDE C PIN 5 |
| RESPONSE 36.38.91.2 | *6 | 46.11.41.2 |
| V HAMMER 40 | | V FR 1 SIDE A PIN 10 |
| RESPONSE 36.39.01.2 | *7 | 46.11.41.2 |
| V HAMMER 41 | | V FR 1 SIDE A PIN 11 |
| RESPONSE 36.39.01.2 | *8 | 46.11.41.2 |
| V HAMMER 42 | | V FR 1 SIDE A PIN 12 |
| RESPONSE 36.39.01.2 | *9 | 46.11.41.2 |
| V HAMMER 43 | | V FR 1 SIDE A PIN 13 |
| RESPONSE 36.39.01.2 | *A | 46.11.41.2 |
| V HAMMER 44 | | V FR 1 SIDE A PIN 14 |
| RESPONSE 36.39.01.2 | *B | 46.11.41.2 |
| V HAMMER 45 | | V FR 1 SIDE C PIN 14 |
| RESPONSE 36.39.01.2 | *C | 46.11.41.2 |
| V HAMMER 46 | | V FR 1 SIDE C PIN 13 |
| RESPONSE 36.39.01.2 | *D | 46.11.41.2 |
| V HAMMER 47 | | V FR 1 SIDE C PIN 12 |
| RESPONSE 36.39.01.2 | *E | 46.11.41.2 |
| V HAMMER 48 | | V FR 1 SIDE C PIN 11 |
| RESPONSE 36.39.01.2 | *F | 46.11.41.2 |
| V HAMMER 49 | | V FR 1 SIDE C PIN 10 |
| RESPONSE 36.39.01.2 | *G | 46.11.41.2 |
| V HAMMER 50 | | V FR 1 SIDE A PIN 15 |
| RESPONSE 36.39.11.2 | *H | 46.11.41.2 |
| V HAMMER 51 | | V FR 1 SIDE A PIN 16 |
| RESPONSE 36.39.11.2 | *J | 46.11.41.2 |
| V HAMMER 52 | | V FR 1 SIDE A PIN 17 |
| RESPONSE 36.39.11.2 | *K | 46.11.41.2 |
| V HAMMER 53 | | V FR 1 SIDE A PIN 18 |
| RESPONSE 36.39.11.2 | *L | 46.11.41.2 |
| V HAMMER 54 | | V FR 1 SIDE A PIN 19 |
| RESPONSE 36.39.11.2 | *M | 46.11.41.2 |
| V HAMMER 55 | | V FR 1 SIDE C PIN 19 |
| RESPONSE 36.39.11.2 | *N | 46.11.41.2 |
| V HAMMER 56 | | V FR 1 SIDE C PIN 18 |
| RESPONSE 36.39.11.2 | *P | 46.11.41.2 |
| V HAMMER 57 | | V FR 1 SIDE C PIN 17 |
| RESPONSE 36.39.11.2 | *Q | 46.11.41.2 |
| V HAMMER 58 | | V FR 1 SIDE C PIN 16 |
| RESPONSE 36.39.11.2 | *R | 46.11.41.2 |
| V HAMMER 59 | | V FR 1 SIDE C PIN 15 |
| RESPONSE 36.39.11.2 | *S | 46.11.41.2 |
| V HAMMER 60 | | V FR 1 SIDE A PIN 20 |
| RESPONSE 36.39.21.2 | *T | 46.11.41.2 |
| V HAMMER 61 | | V FR 1 SIDE A PIN 21 |
| RESPONSE 36.39.21.2 | *U | 46.11.41.2 |
| V HAMMER 62 | | V FR 1 SIDE A PIN 22 |
| RESPONSE 36.39.21.2 | *V | 46.11.41.2 |
| V HAMMER 63 | | V FR 1 SIDE A PIN 23 |
| RESPONSE 36.39.21.2 | *W | 46.11.41.2 |
| V HAMMER 64 | | V FR 1 SIDE A PIN 24 |
| RESPONSE 36.39.21.2 | *X | 46.11.41.2 |
| V HAMMER 65 | | V FR 1 SIDE C PIN 24 |
| RESPONSE 36.39.21.2 | *Y | 46.11.41.2 |
| V HAMMER 66 | | V FR 1 SIDE C PIN 23 |
| RESPONSE 36.39.21.2 | *Z | 46.11.41.2 |

| | | | | | |
|---|---|---|---|---|---|
| *1—01A4A04D | *2—01A4A05D | *3—01A4A06D | *4—01A4A07D | *5—01A4A08D | *6—01A4A09D |
| *7—01A4A03R | *8—01A4A01E | *9—01A4A02E | *A—01A4A03E | *B—01A4A04E | *C—01A4A05E |
| *D—01A4A06E | *E—01A4A07E | *F—01A4A08E | *G—01A4A09E | *H—01A4A040 | *J—01A4A01F |
| *K—01A4A02F | *L—01A4A03F | *M—01A4A04F | *N—01A4A05F | *P—01A4A06F | *Q—01A4A07F |
| *R—01A4A08F | *S—01A4A09F | *T—01A4A04R | *U—01A4A016 | *V—01A4A026 | *W—01A4A036 |
| *X—01A4A046 | *Y—01A4A056 | *Z—01A4A066 | | | |

COMMENTS

| TAG | DATE | E.C.NO. | TAG | DATE | E.C.NO. | TAG | DATE | E.C.NO. | TAG | DATE | E.C.NO. |
|---|---|---|---|---|---|---|---|---|---|---|---|
| A | 09-06-60 | 109501 | B | 12-07-62 | 116739 | | | | | | |

| | | |
|---|---|---|
| V HAMMER 67 RESPONSE 36.39.21.2—*1 | | V FR 1 SIDE C PIN 22 — 46.11.41.2 |
| V HAMMER 68 RESPONSE 36.39.21.2—*2 | | V FR 1 SIDE C PIN 21 — 46.11.41.2 |
| V HAMMER 69 RESPONSE 36.39.21.2—*3 | | V FR 1 SIDE C PIN 20 — 46.11.41.2 |
| V HAMMER 70 RESPONSE 36.39.31.2—*4 | | V FR 1 SIDE A PIN 25 — 46.11.41.2 |
| V HAMMER 71 RESPONSE 36.39.31.2—*5 | | V FR 1 SIDE A PIN 26 — 46.11.41.2 |
| V HAMMER 72 RESPONSE 36.39.31.2—*6 | | V FR 1 SIDE A PIN 27 — 46.11.41.2 |
| V HAMMER 73 RESPONSE 36.39.31.2—*7 | | V FR 1 SIDE A PIN 28 — 46.11.41.2 |
| V HAMMER 74 RESPONSE 36.39.31.2—*8 | | V FR 1 SIDE A PIN 29 — 46.11.41.2 |
| V HAMMER 75 RESPONSE 36.39.31.2—*9 | | V FR 1 SIDE C PIN 29 — 46.11.41.2 |
| V HAMMER 76 RESPONSE 36.39.31.2—*A | | V FR 1 SIDE C PIN 28 — 46.11.41.2 |
| V HAMMER 77 RESPONSE 36.39.31.2—*B | | V FR 1 SIDE C PIN 27 — 46.11.41.2 |
| V HAMMER 78 RESPONSE 36.39.31.2—*C | | V FR 1 SIDE C PIN 26 — 46.11.41.2 |
| V HAMMER 79 RESPONSE 36.39.31.2—*D | | V FR 1 SIDE C PIN 25 — 46.11.41.2 |
| V HAMMER 80 RESPONSE 36.39.41.2—*E | | V FR 1 SIDE A PIN 30 — 46.11.41.2 |
| V HAMMER 81 RESPONSE 36.39.41.2—*F | | V FR 1 SIDE A PIN 31 — 46.11.41.2 |
| V HAMMER 82 RESPONSE 36.39.41.2—*6 | | V FR 1 SIDE A PIN 32 — 46.11.41.2 |
| V HAMMER 83 RESPONSE 36.39.41.2—*H | | V FR 1 SIDE A PIN 33 — 46.11.41.2 |
| V HAMMER 84 RESPONSE 36.39.41.2—*J | | V FR 1 SIDE A PIN 34 — 46.11.41.2 |
| V HAMMER 85 RESPONSE 36.39.41.2—*K | | V FR 1 SIDE C PIN 34 — 46.11.41.2 |
| V HAMMER 86 RESPONSE 36.39.41.2—*L | | V FR 1 SIDE C PIN 33 — 46.11.41.2 |
| V HAMMER 87 RESPONSE 36.39.41.2—*M | | V FR 1 SIDE C PIN 32 — 46.11.41.2 |
| V HAMMER 88 RESPONSE 36.39.41.2—*N | | V FR 1 SIDE C PIN 31 — 46.11.41.2 |
| V HAMMER 89 RESPONSE 36.39.41.2—*P | | V FR 1 SIDE C PIN 30 — 46.11.41.2 |
| V HAMMER 90 RESPONSE 36.39.51.2—*Q | | V FR 1 SIDE A PIN 35 — 46.11.41.2 |
| V HAMMER 91 RESPONSE 36.39.51.2—*R | | V FR 1 SIDE A PIN 36 — 46.11.41.2 |
| V HAMMER 92 RESPONSE 36.39.51.2—*S | | V FR 1 SIDE A PIN 37 — 46.11.41.2 |
| V HAMMER 93 RESPONSE 36.39.51.2—*T | | V FR 1 SIDE A PIN 38 — 46.11.41.2 |
| V HAMMER 94 RESPONSE 36.39.51.2—*U | | V FR 1 SIDE A PIN 39 — 46.11.41.2 |
| V HAMMER 95 RESPONSE 36.39.51.2—*V | | V FR 1 SIDE C PIN 39 — 46.11.41.2 |
| V HAMMER 96 RESPONSE 36.39.51.2—*W | | V FR 1 SIDE C PIN 38 — 46.11.41.2 |
| V HAMMER 97 RESPONSE 36.39.51.2—*X | | V FR 1 SIDE C PIN 37 — 46.11.41.2 |
| V HAMMER 98 RESPONSE 36.39.51.2—*Y | | V FR 1 SIDE C PIN 36 — 46.11.41.2 |
| V HAMMER 99 RESPONSE 36.39.51.2—*Z | | V FR 1 SIDE C PIN 35 — 46.11.41.2 |

| | | | | | |
|---|---|---|---|---|---|
| *1—01A4A076 | *2—01A4A086 | *3—01A4A096 | *4—01A4A050 | *5—01A4A01H | *6—01A4A02H |
| *7—01A4A03H | *8—01A4A04H | *9—01A4A05H | *A—01A4A06H | *B—01A4A07H | *C—01A4A08H |
| *D—01A4A09H | *E—01A4A05R | *F—01A4A01K | *6—01A4A02K | *H—01A4A03K | *J—01A4A04K |
| *K—01A4A05K | *L—01A4A06K | *M—01A4A07K | *N—01A4A08K | *P—01A4A09K | *Q—01A4A06Q |
| *R—01A4A01L | *S—01A4A02L | *T—01A4A03L | *U—01A4A04L | *V—01A4A05L | *W—01A4A06L |
| *X—01A4A07L | *Y—01A4A08L | *Z—01A4A09L | | | |

| COMMENTS | TAG | DATE | E.C.NO. | TAG | DATE | E.C.NO. | TAG | DATE | E.C.NO. | TAG | DATE | E.C.NO. |
|---|---|---|---|---|---|---|---|---|---|---|---|---|
| | A | 09-06-60 | 109501 | B | 12-07-62 | 116739 | | | | | | |

| | | |
|---|---|---|
| V HAMMER 100 | | V FR 1 SIDE A PIN 40 |
| RESPONSE 36.39.61.2 | *1 | 46.11.41.2 |
| V HAMMER 101 | | V FR 1 SIDE A PIN 41 |
| RESPONSE 36.39.61.2 | *2 | 46.11.41.2 |
| V HAMMER 102 | | V FR 1 SIDE A PIN 42 |
| RESPONSE 36.39.61.2 | *3 | 46.11.41.2 |
| V HAMMER 103 | | V FR 1 SIDE A PIN 43 |
| RESPONSE 36.39.61.2 | *4 | 46.11.41.2 |
| V HAMMER 104 | | V FR 1 SIDE A PIN 44 |
| RESPONSE 36.39.61.2 | *5 | 46.11.41.2 |
| V HAMMER 105 | | V FR 1 SIDE C PIN 44 |
| RESPONSE 36.39.61.2 | *6 | 46.11.41.2 |
| V HAMMER 106 | | V FR 1 SIDE C PIN 43 |
| RESPONSE 36.39.61.2 | *7 | 46.11.41.2 |
| V HAMMER 107 | | V FR 1 SIDE C PIN 42 |
| RESPONSE 36.39.61.2 | *8 | 46.11.41.2 |
| V HAMMER 108 | | V FR 1 SIDE C PIN 41 |
| RESPONSE 36.39.61.2 | *9 | 46.11.41.2 |
| V HAMMER 109 | | V FR 1 SIDE C PIN 40 |
| RESPONSE 36.39.61.2 | *A | 46.11.41.2 |
| V HAMMER 110 | | V FR 1 SIDE B PIN 1 |
| RESPONSE 36.39.71.2 | *B | 46.11.41.2 |
| V HAMMER 111 | | V FR 1 SIDE B PIN 5 |
| RESPONSE 36.39.71.2 | *C | 46.11.41.2 |
| V HAMMER 112 | | V FR 1 SIDE B PIN 8 |
| RESPONSE 36.39.71.2 | *D | 46.11.41.2 |
| V HAMMER 113 | | V FR 1 SIDE B PIN 11 |
| RESPONSE 36.39.71.2 | *E | 46.11.41.2 |
| V HAMMER 114 | | V FR 1 SIDE B PIN 14 |
| RESPONSE 36.39.71.2 | *F | 46.11.41.2 |
| V HAMMER 115 | | V FR 1 SIDE B PIN 17 |
| RESPONSE 36.39.71.2 | *6 | 46.11.41.2 |
| V HAMMER 116 | | V FR 1 SIDE B PIN 20 |
| RESPONSE 36.39.71.2 | *H | 46.11.41.2 |
| V HAMMER 117 | | V FR 1 SIDE B PIN 23 |
| RESPONSE 36.39.71.2 | *J | 46.11.41.2 |
| V HAMMER 118 | | V FR 1 SIDE B PIN 26 |
| RESPONSE 36.39.71.2 | *K | 46.11.41.2 |
| V HAMMER 119 | | V FR 1 SIDE B PIN 29 |
| RESPONSE 36.39.71.2 | *L | 46.11.41.2 |
| V HAMMER 120 | | V FR 1 SIDE B PIN 2 |
| RESPONSE 36.39.81.2 | *M | 46.11.41.2 |
| V HAMMER 121 | | V FR 1 SIDE B PIN 6 |
| RESPONSE 36.39.81.2 | *N | 46.11.41.2 |
| V HAMMER 122 | | V FR 1 SIDE B PIN 9 |
| RESPONSE 36.39.81.2 | *P | 46.11.41.2 |
| V HAMMER 123 | | V FR 1 SIDE B PIN 12 |
| RESPONSE 36.39.81.2 | *Q | 46.11.41.2 |
| V HAMMER 124 | | V FR 1 SIDE B PIN 15 |
| RESPONSE 36.39.81.2 | *R | 46.11.41.2 |
| V HAMMER 125 | | V FR 1 SIDE B PIN 18 |
| RESPONSE 36.39.81.2 | *S | 46.11.41.2 |
| V HAMMER 126 | | V FR 1 SIDE B PIN 21 |
| RESPONSE 36.39.81.2 | *T | 46.11.41.2 |
| V HAMMER 127 | | V FR 1 SIDE B PIN 24 |
| RESPONSE 36.39.81.2 | *U | 46.11.41.2 |
| V HAMMER 128 | | V FR 1 SIDE B PIN 27 |
| RESPONSE 36.39.81.2 | *V | 46.11.41.2 |
| V HAMMER 129 | | V FR 1 SIDE B PIN 31 |
| RESPONSE 36.39.81.2 | *W | 46.11.41.2 |
| V HAMMER 130 | | V FR 1 SIDE B PIN 3 |
| RESPONSE 36.39.91.2 | *X | 46.11.41.2 |
| V HAMMER 131 | | V FR 1 SIDE B PIN 7 |
| RESPONSE 36.39.91.2 | *Y | 46.11.41.2 |
| V HAMMER 132 | | V FR 1 SIDE B PIN 10 |
| RESPONSE 36.39.91.2 | *Z | 46.11.41.2 |

| | | | | | |
|---|---|---|---|---|---|
| *1—01A4A06R | *2—01A4A01M | *3—01A4A02M | *4—01A4A03M | *5—01A4A04M | *6—01A4A05M |
| *7—01A4A06M | *8—01A4A07M | *9—01A4A08M | *A—01A4A09M | *B—01A4A07Q | *C—01A4A01N |
| *D—01A4A02N | *E—01A4A03N | *F—01A4A04N | *6—01A4A05N | *H—01A4A06N | *J—01A4A07N |
| *K—01A4A08N | *L—01A4A09N | *M—01A4A07R | *N—01A4A01P | *P—01A4A02P | *Q—01A4A03P |
| *R—01A4A04P | *S—01A4A05P | *T—01A4A06P | *U—01A4A07P | *V—01A4A08P | *W—01A4A09P |
| *X—01A4A08Q | *Y—01A4A01Q | *Z—01A4A02Q | | | |

COMMENTS

| TAG | DATE | E.C.NO. | TAG | DATE | E.C.NO. | TAG | DATE | E.C.NO. | TAG | DATE | E.C.NO. |
|---|---|---|---|---|---|---|---|---|---|---|---|
| A | 09-06-60 | 109501 | B | 03-08-61 | 110411B | C | 12-07-62 | 116739 | | | |

482888

# PRINT STORAGE ARRAY

46.11.41.2

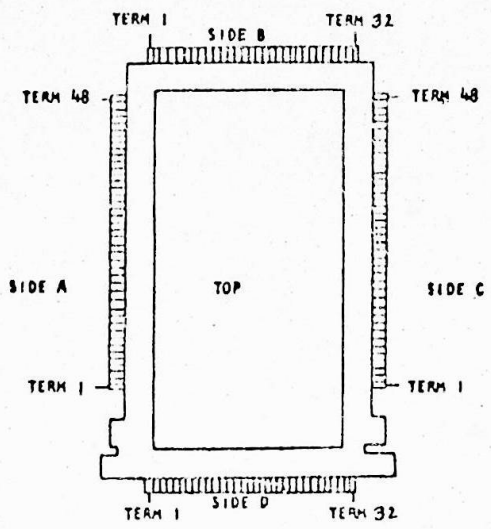


| | |
|---|---|
| 1 | HAMMER FIRE CONNECTIONS |
| 2 | HAMMER FIRE CORES |
| 3 | PRINT LINE COMPLETE |
| 4 | EQUAL CHECK |
| 5 | PRINT ERROR CHECK |
| 6 | 1 BIT |
| 7 | 2 BIT |
| 8 | 4 BIT |
| 9 | 8 BIT |
| 10 | A BIT |
| 11 | B BIT |
| 12 | C BIT |
| 13 | WORD MARK |
| 14 | DUMMY |

| DATE | EC NO | DATE | EC NO | DATE | EC NO |
|---|---|---|---|---|---|
| 9-6-60 | 109501 | | | | |

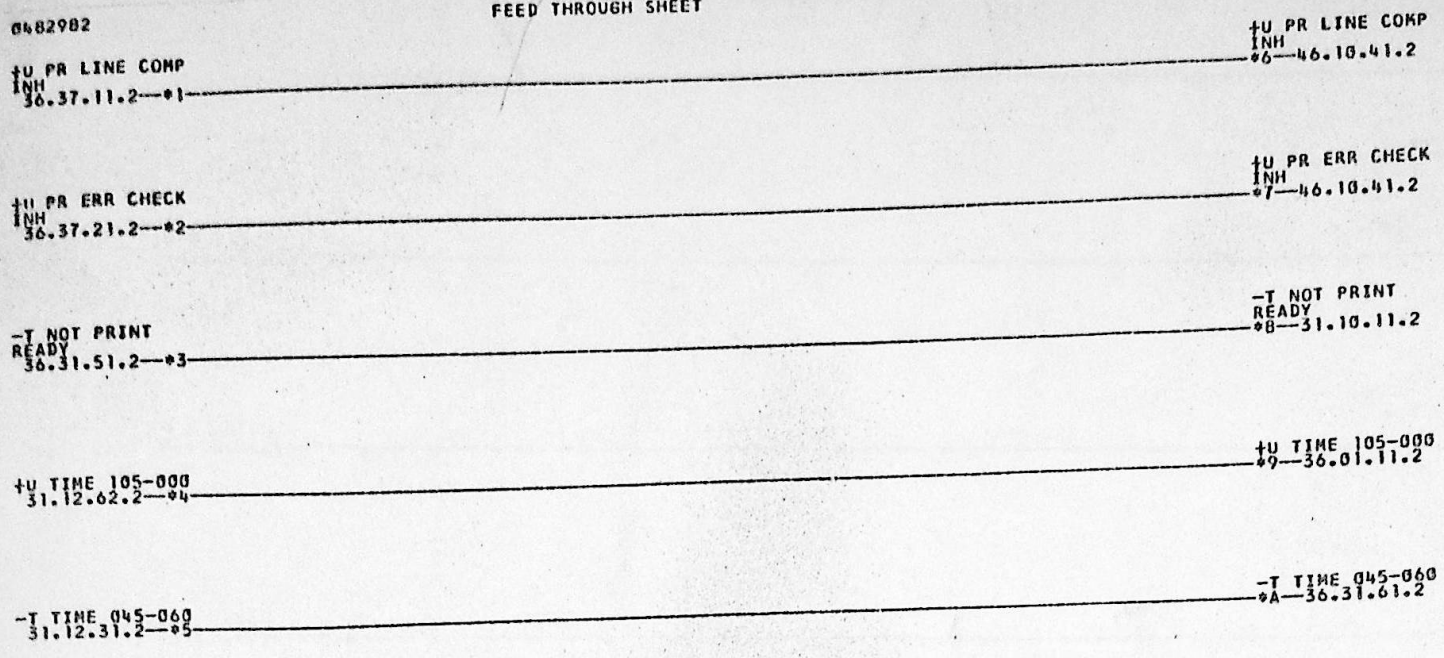


*1—01A5D26K *2—01A5D26G *3—01A5D26N *4—01A5D25P *5—01A5D25Q *6—01A5E25J
*7—01A5F25Q *8—01A5D25N *9—01A5D26P *A—01A5D26Q

COMMENTS

| TAG | DATE | E.C.NO. |
|---|---|---|
| A | 09-07-60 | 109500X |
| B | 12-15-60 | 110416 |
| C | 01-04-63 | 116741 |
| | | |

+U A LATCH 46.10.21.2—*1
+U A LATCH 46.36.81.2
+U A LATCH 46.36.91.2

+U B LATCH 46.10.21.2—*2
+U B LATCH 46.36.81.2
+U B LATCH 46.36.91.2

+U A LATCH 46.10.31.2—*3
+U A LATCH 46.36.81.2
+U A LATCH 46.36.91.2

+U B LATCH 46.10.31.2—*4
+U B LATCH 46.36.81.2
+U B LATCH 46.36.91.2

+U C LATCH 46.10.31.2—*5
+U C LATCH 46.36.81.2
+U C LATCH 46.36.91.2

+U WM LATCH 46.10.31.2—*6
+U WM LATCH 46.36.81.2
+U WM LATCH 46.36.91.2

+U NOT WM LATCH 46.10.31.2—*7
+U NOT WM LATCH 46.36.91.2
+U NOT WM LATCH *A—36.37.11.2

-T NOT PR SCAN COMP 36.31.41.2—*8
-T NOT PR SCAN COMP 46.37.41.2
-T NOT PR SCAN COMP 46.37.31.2
-T NOT PR SCAN COMP 46.37.71.2
-T NOT PR SCAN COMP 46.37.91.2

-T TIME 000-030 31.12.12.2—*9
-T TIME 000-030 46.37.31.2
-T TIME 000-030 46.37.81.2
-T TIME 000-030 *B—36.31.51.2

*1—01A5F26L *2—01A5F26M *3—01A5F26N *4—01A5F26P *5—01A5F26Q *6—01A5F26R
*7—01A5F26M *8—01A5D24A *9—01A5D25R *A—01A5D24P *B—01A5D26F

COMMENTS

| TAG | DATE | E.C.NO. | TAG | DATE | E.C.NO. | TAG | DATE | E.C.NO. | TAG | DATE | E.C.NO. |
|---|---|---|---|---|---|---|---|---|---|---|---|
| A | 09-07-60 | 109500X | | | | | | | | | |

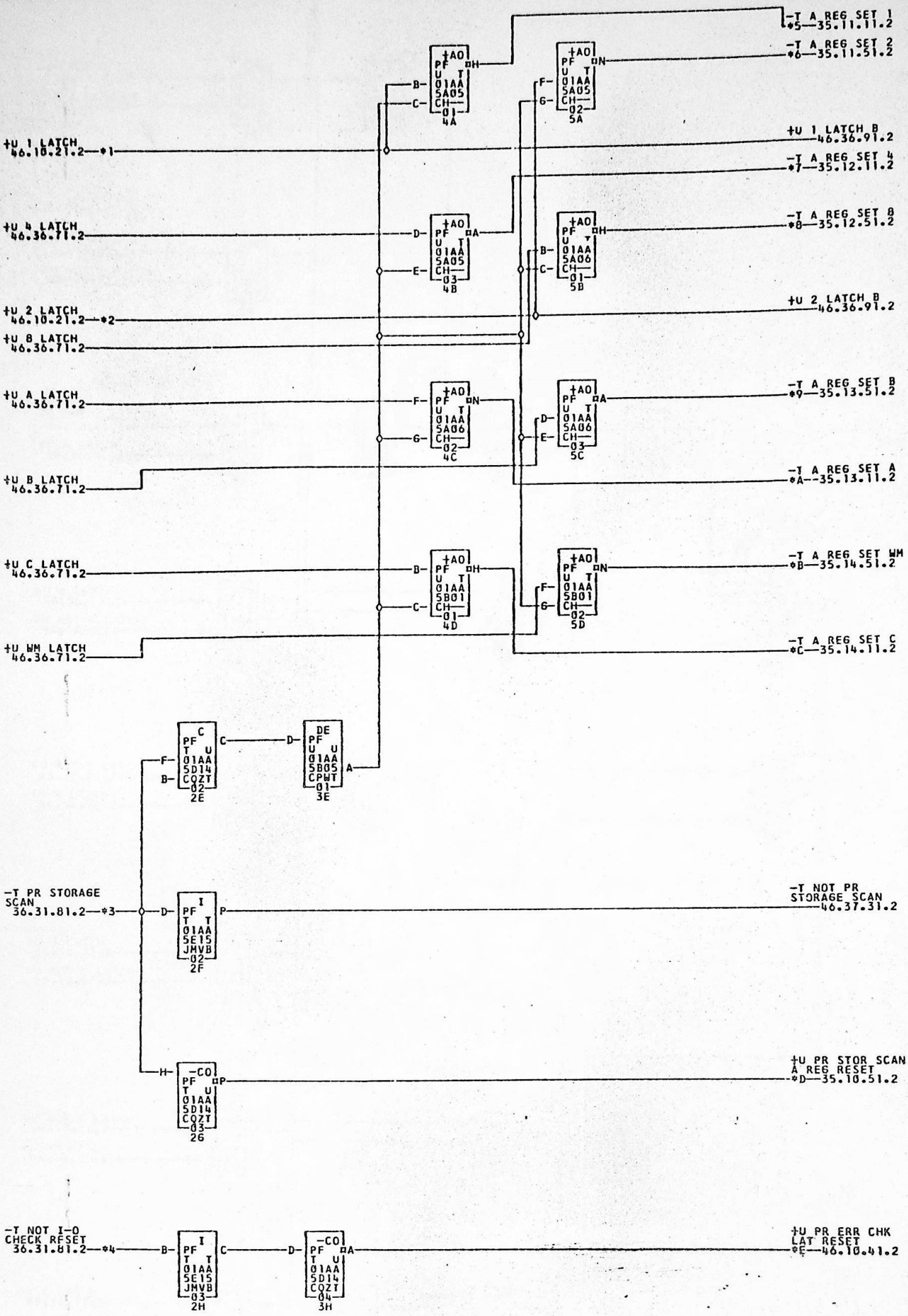


*1—01A5F26J *2—01A5F26K *3—01A5D24G *4—01A5D24E *5—01A5C26A *6—01A5C26B
*7—01A5C26C —01A3E24C *8—01A5C26D *9—01A5C26F *A—01A5C26E *B—01A5C26P
*C—01A5C26G *D—01A5C26N *E—01A5E25R

COMMENTS

| TAG | DATE | E.C.NO. | TAG | DATE | E.C.NO. | TAG | DATE | E.C.NO. | TAG | DATE | E.C.NO. |
|---|---|---|---|---|---|---|---|---|---|---|---|
| A | 09-07-60 | 109500X | B | 10-24-60 | 109522 | C | 03-08-61 | 110431B | D | 01-04-63 | 116741 |

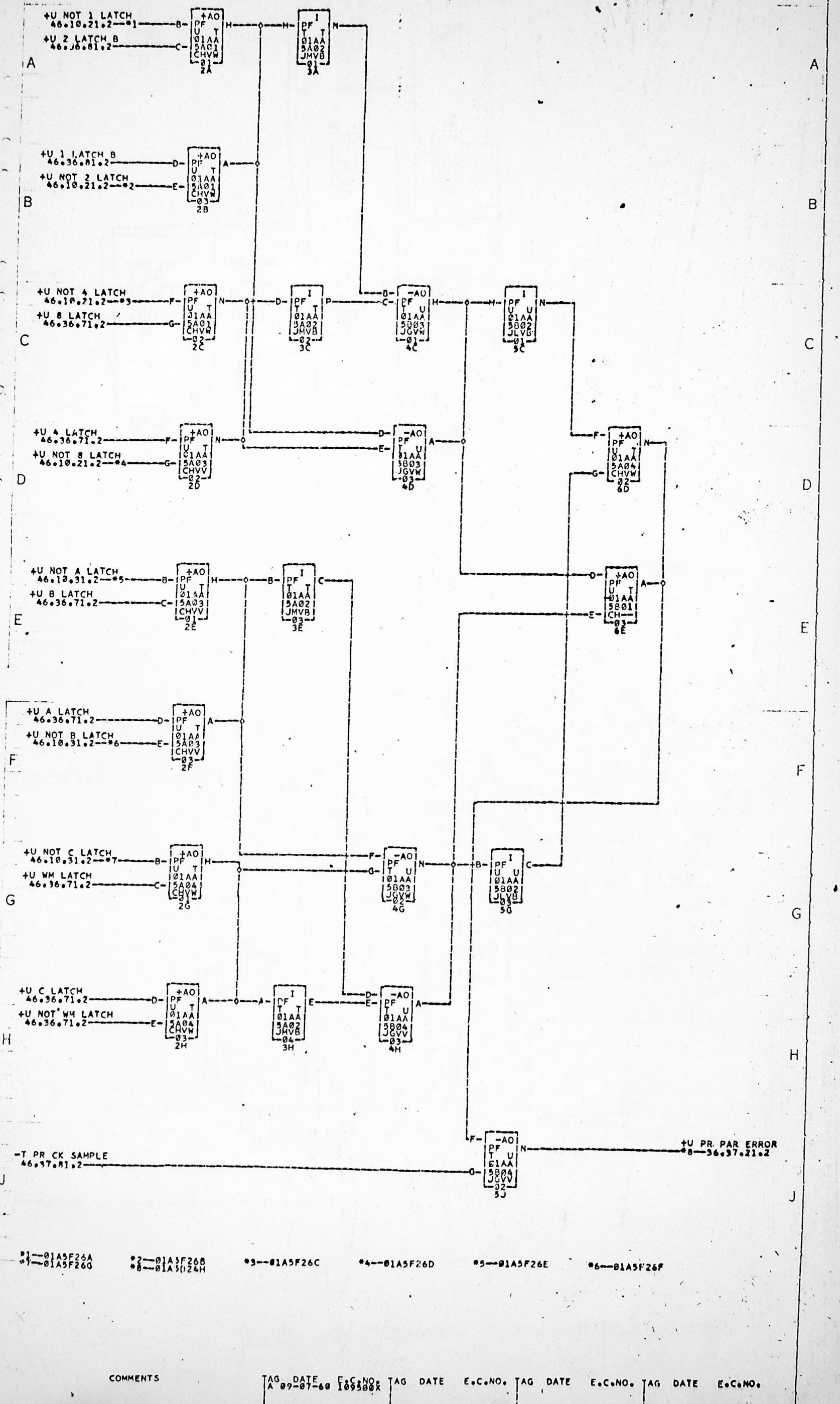


COMMENTS

| TAG | DATE | E.C.NO. | TAG | DATE | E.C.NO. | TAG | DATE | E.C.NO. | TAG | DATE | E.C.NO. |
|---|---|---|---|---|---|---|---|---|---|---|---|
| A | 09-07-60 | 1095008 | | | | | | | | | |

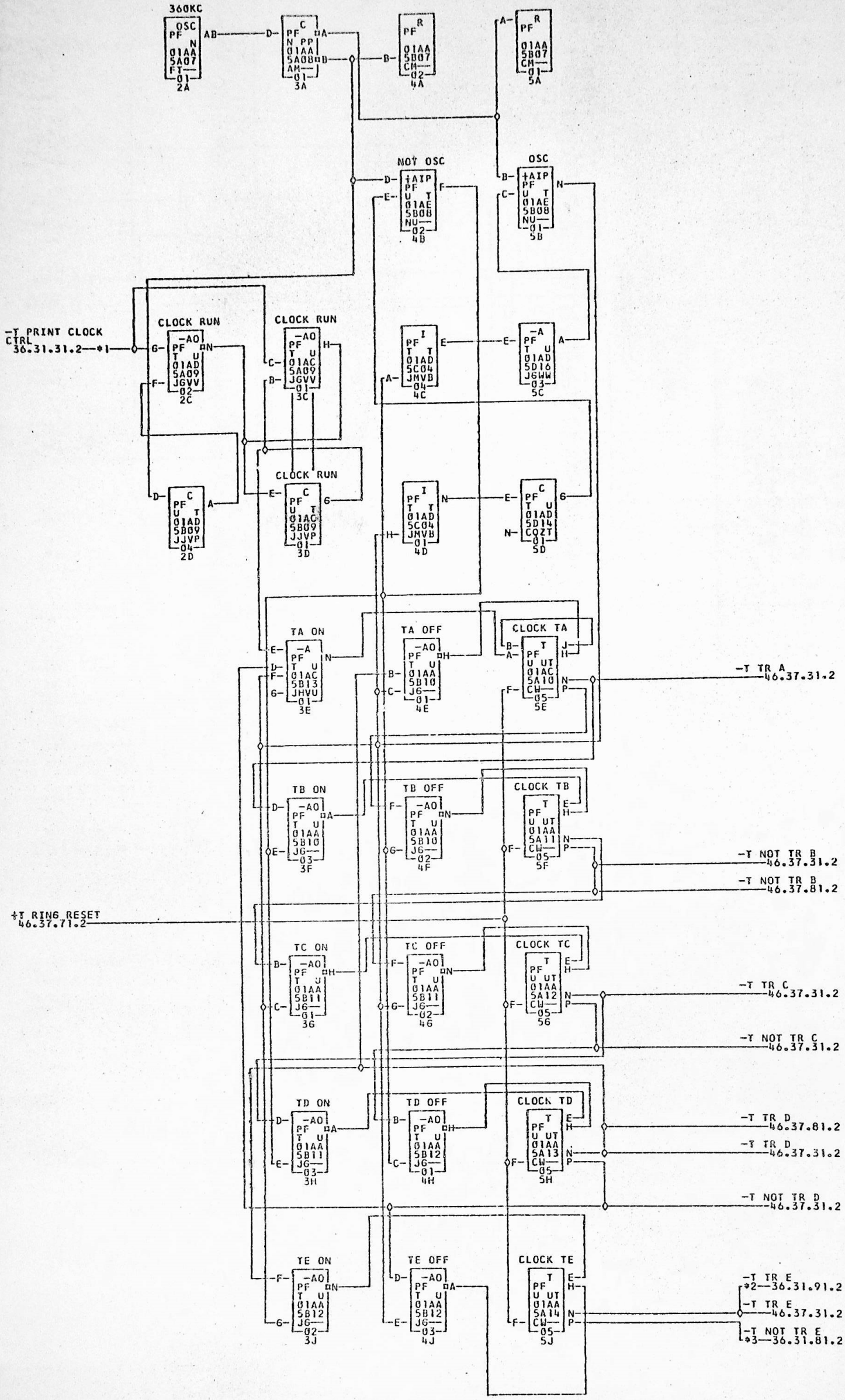


*1--01A5D24C *2—01A5D26E *3—01A5D26D

COMMENTS

| TAG | DATE | E.C.NO. | TAG | DATE | E.C.NO. | TAG | DATE | E.C.NO. | TAG | DATE | E.C.NO. |
|---|---|---|---|---|---|---|---|---|---|---|---|
| A | 09-07-60 | 109500X | B | 10-24-60 | 109522 | C | 02-22-61 | 110430 | D | 04-03-61 | 110434 |
| E | 01-04-63 | 116741 | | | | | | | | | |

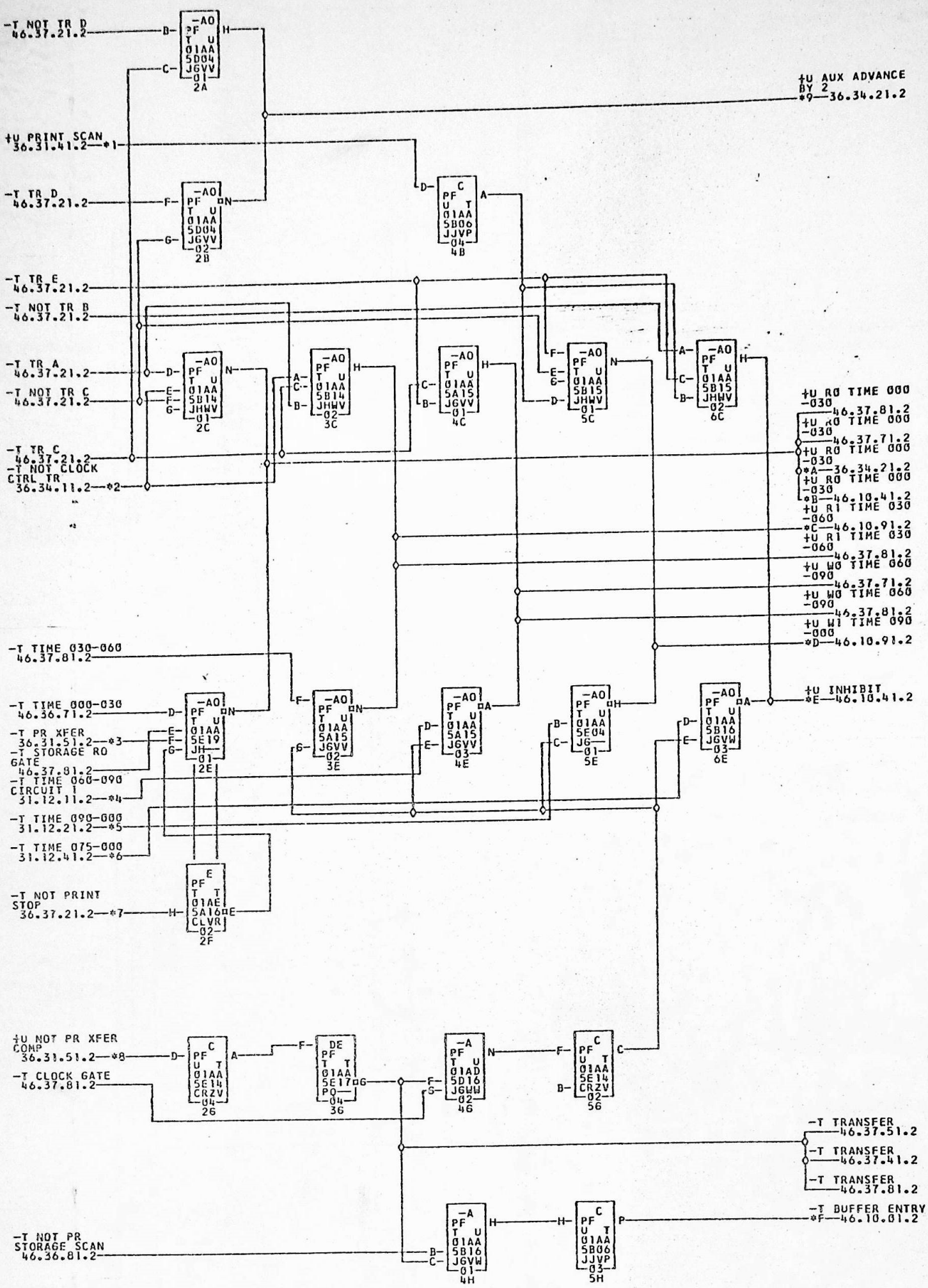


*1—01A5D24F *2—01A5D24K *3—01A5D24D *4—01A5D25B *5—01A5D25K *6—01A5D25E
*7—01A5D24R *8—01A5D24J *9—01A5D26L *A—01A5D26M *B—01A5F25J *C—01A5F25M
*D—01A5F25R *E—01A5F25L *F—01A5F25K

COMMENTS

| TAG | DATE | E.C.NO. |
|---|---|---|
| A | 09-07-60 | 109500X |
| E | 01-04-63 | 116741 |

| TAG | DATE | E.C.NO. |
|---|---|---|
| B | 02-22-61 | 110430 |

| TAG | DATE | E.C.NO. |
|---|---|---|
| C | 03-08-61 | 110431B |

| TAG | DATE | E.C.NO. |
|---|---|---|
| D | 04-03-61 | 110434 |

0482988

# PRINT BUFFER UNITS RING U0-U4

1401 PF 46.37.41.2

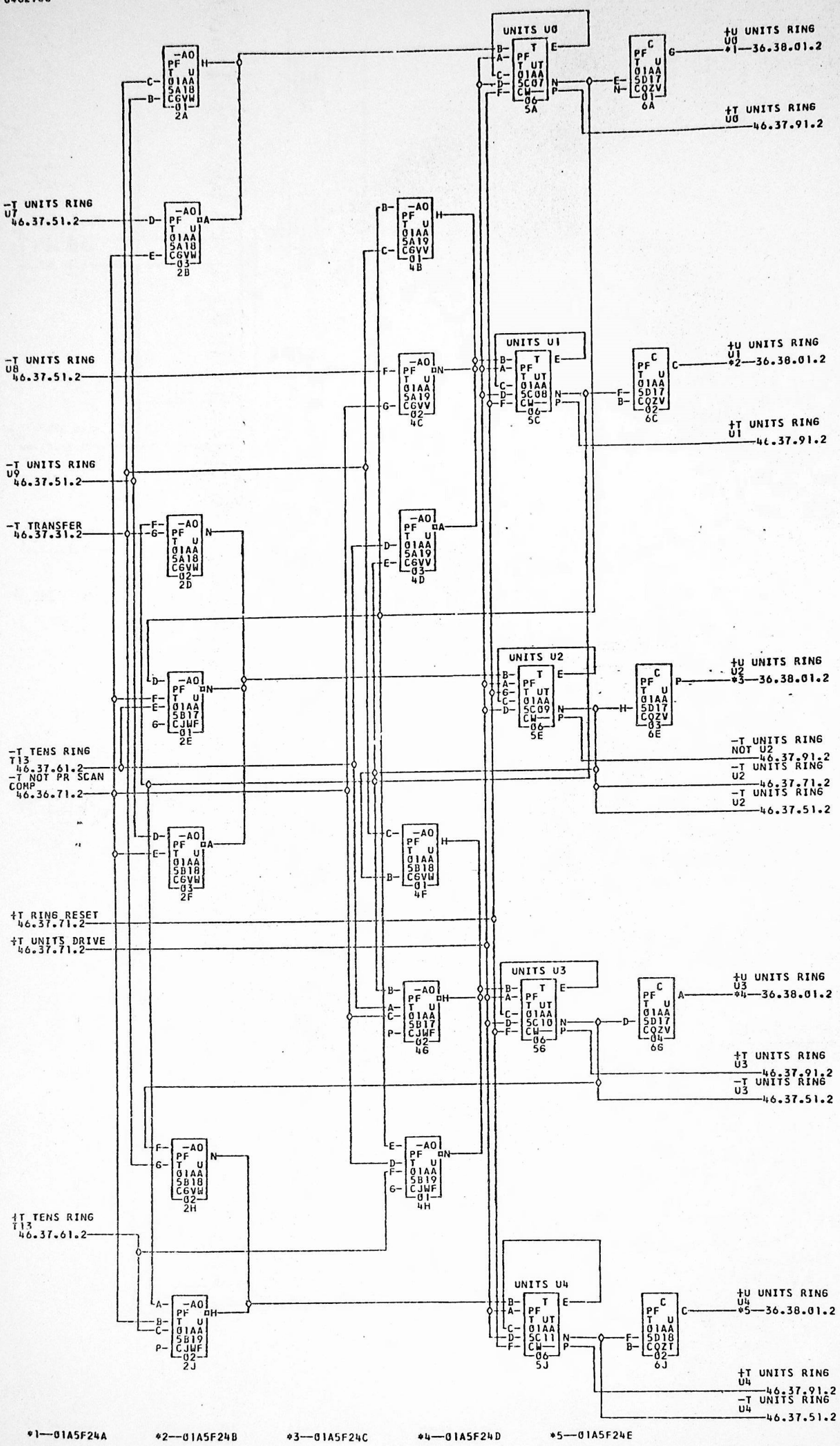


| COMMENTS | TAG | DATE | E.C.NO. | TAG | DATE | E.C.NO. | TAG | DATE | E.C.NO. | TAG | DATE | E.C.NO. |
|---|---|---|---|---|---|---|---|---|---|---|---|---|
| | A | 09-07-60 | 109500X | B | 01-04-63 | 116741 | | | | | | |

0482989

PRINT BUFFER UNITS RING U5-U9

1401 PF 46.37.51.2

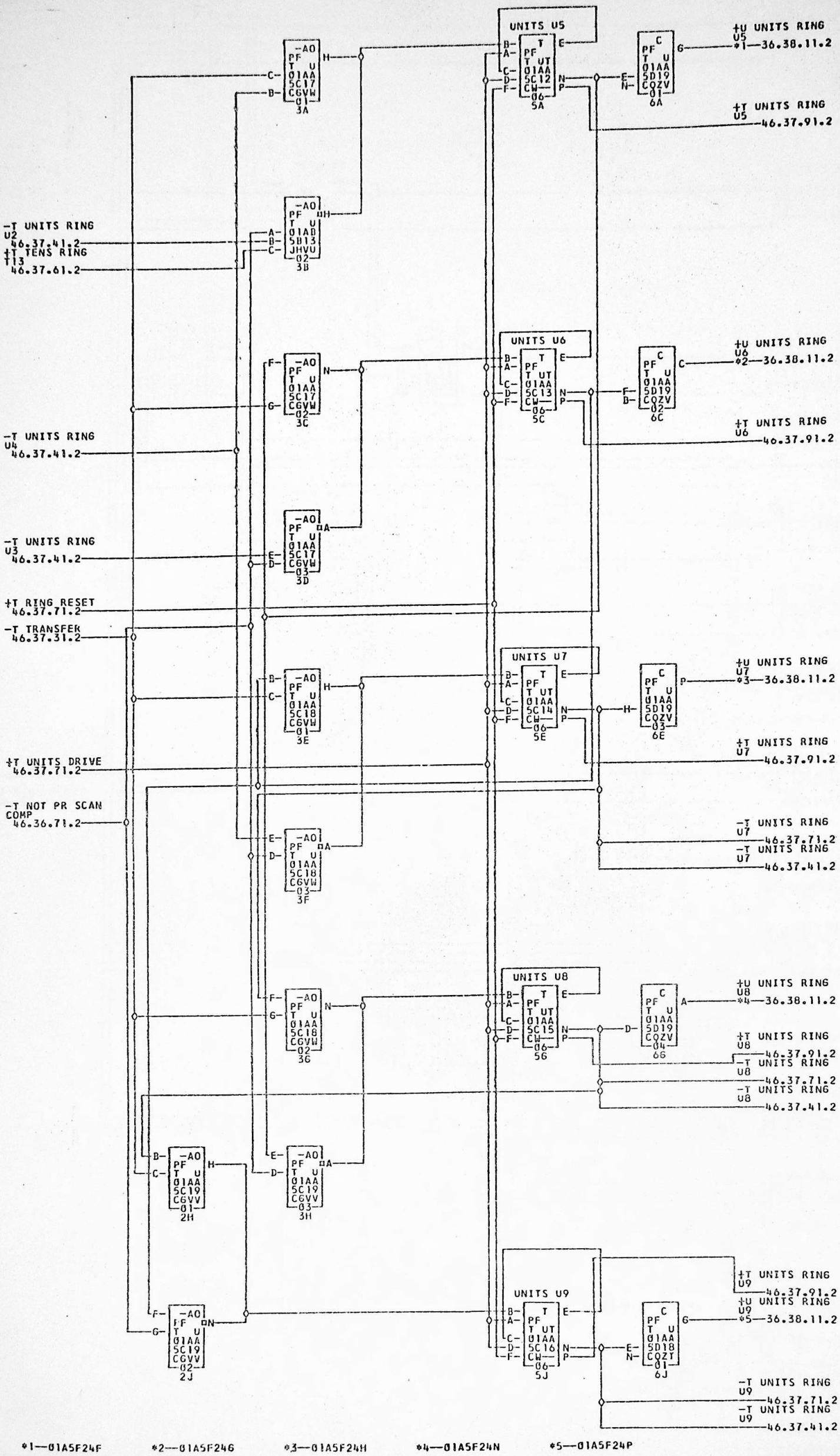


*1—01A5F24F *2—01A5F246 *3—01A5F24H *4—01A5F24N *5—01A5F24P

COMMENTS

| TAG | DATE | E.C.NO. | TAG | DATE | E.C.NO. | TAG | DATE | E.C.NO. | TAG | DATE | E.C.NO. |
|---|---|---|---|---|---|---|---|---|---|---|---|
| A | 09-07-60 | 109500X | B | 02-22-61 | 110430 | C | 01-04-63 | 116741 | | | |

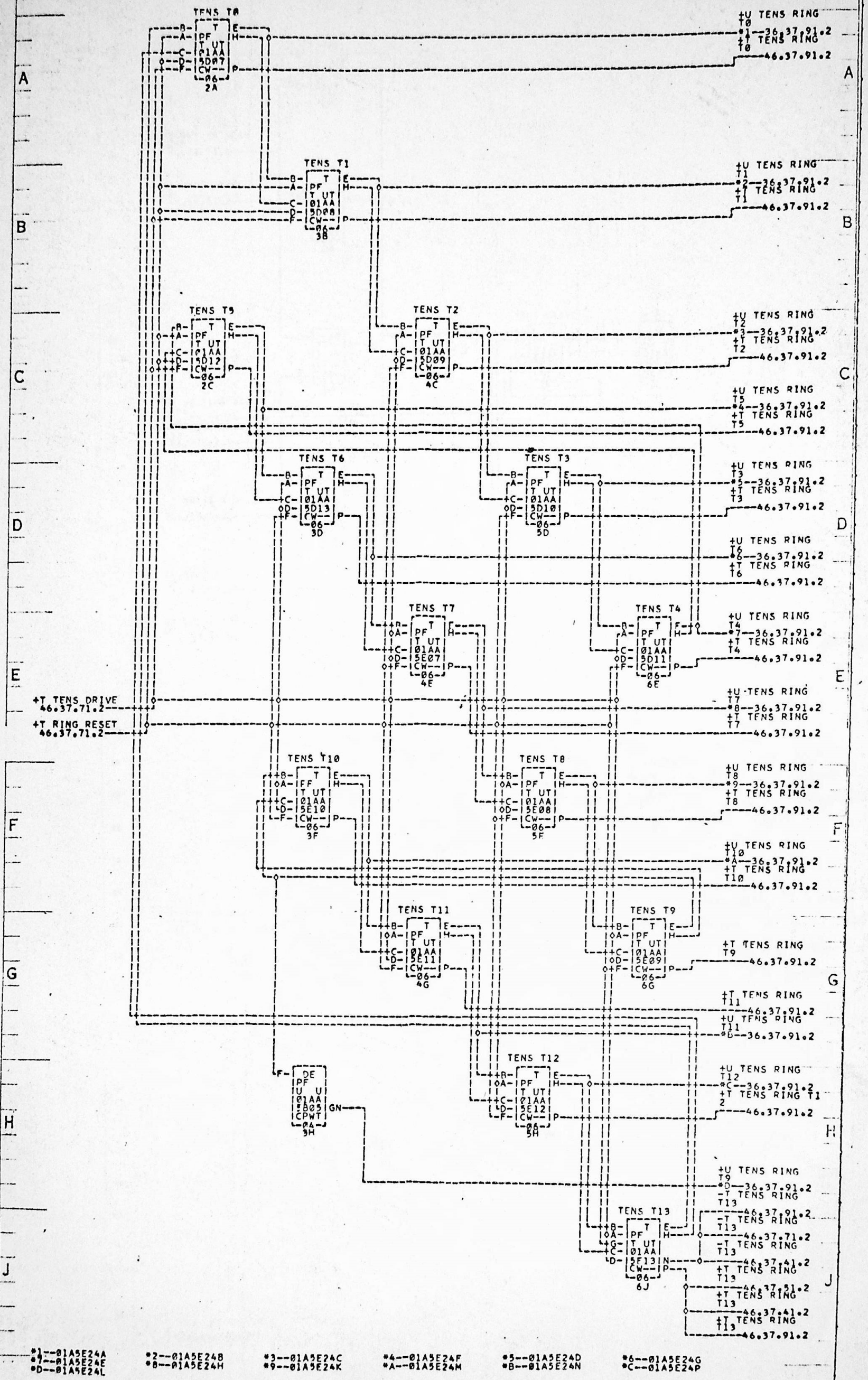


*1--01A5E24A *2--01A5E24B *3--01A5E24C *4--01A5E24F *5--01A5E24D *6--01A5E24G
*7--01A5E24E *8--01A5E24H *9--01A5E24K *A--01A5E24M *B--01A5E24N *C--01A5E24P
*D--01A5E24L

| COMMENTS | TAG | DATE | E.C.NO. | TAG | DATE | E.C.NO. | TAG | DATE | E.C.NO. | TAG | DATE | E.C.NO. |
|---|---|---|---|---|---|---|---|---|---|---|---|---|
| | A | 09-07-60 | 109500X | B | 10-24-60 | 109522 | | | | | | |

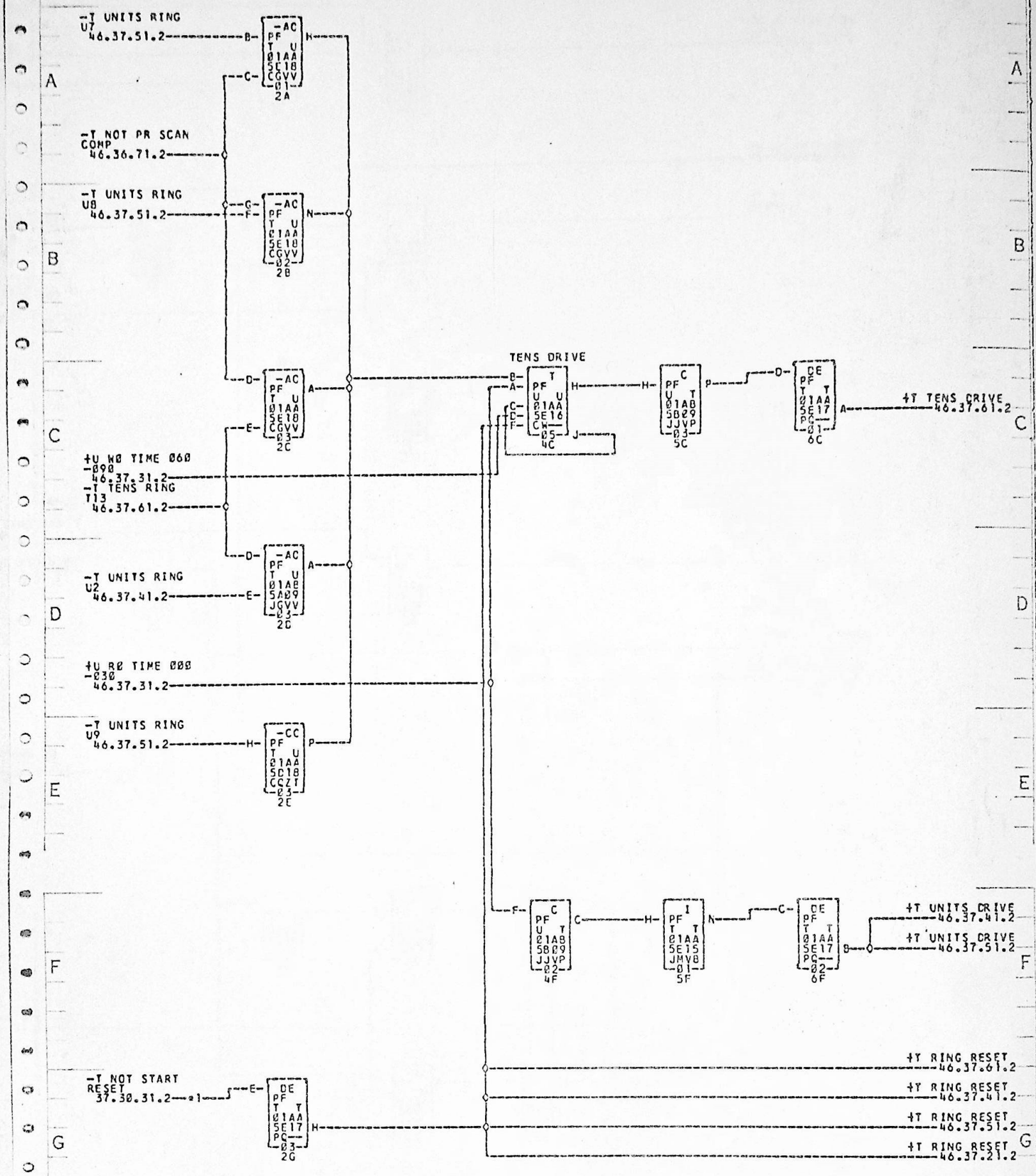


| COMMENTS | TAG | DATE | E.C.NO. | TAG | DATE | E.C.NO. | TAG | DATE | E.C.NO. | TAG | DATE | E.C.NO. |
|---|---|---|---|---|---|---|---|---|---|---|---|---|
| | A | 09-07-60 | 109500X | B | 02-22-61 | 110430 | C | 04-03-61 | 110434 | | | |

0482992

# PRINT CONTROL CLOCK PULSES

1401 PF 46.37.81.2

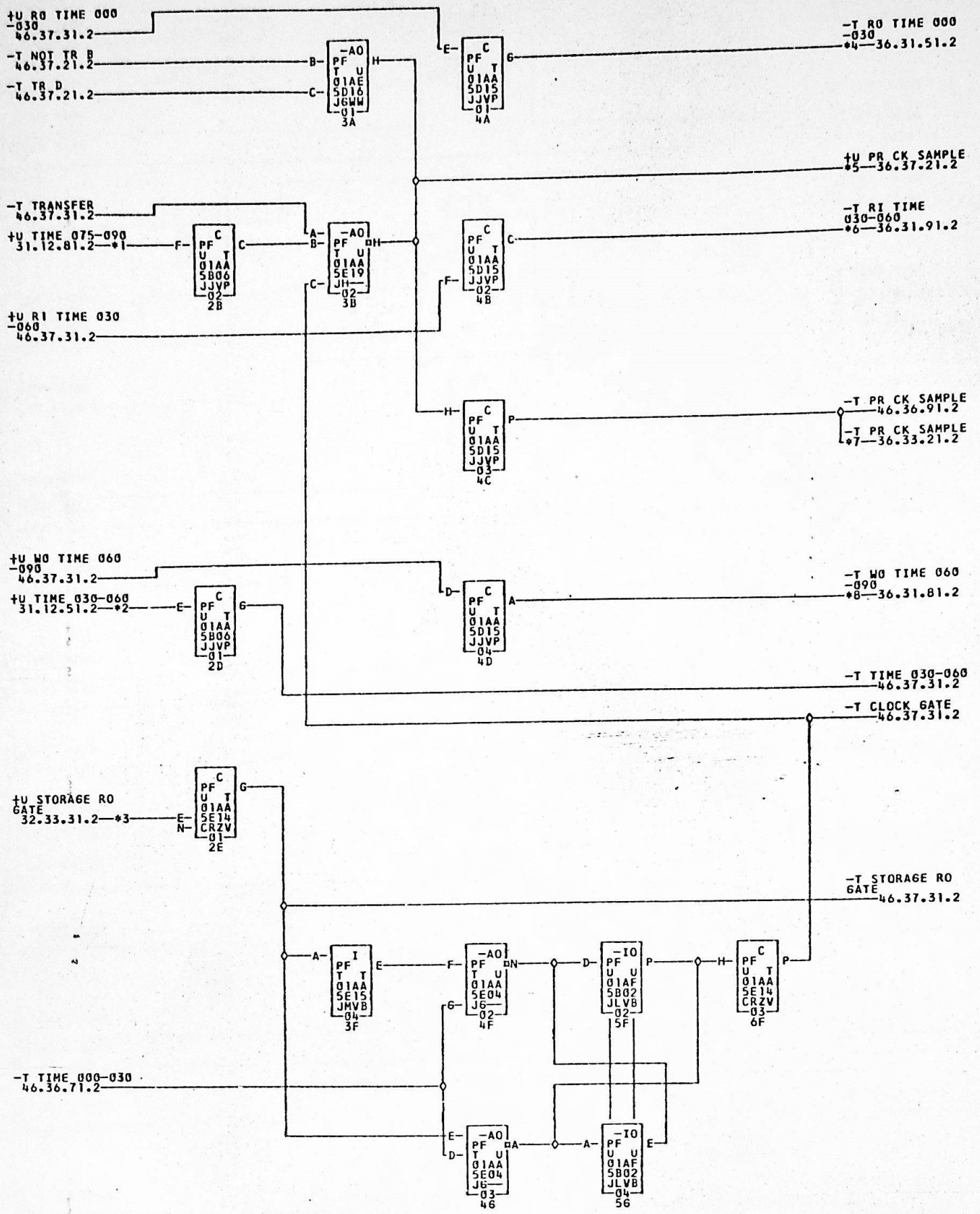


*1—01A5D25J *2—01A5D25H *3—01A5D24L *4—01A5D26A *5—01A5D26J *6—01A5D26H
*7—01A5D26C *8—01A5D26B

COMMENTS

| TAG | DATE | E.C.NO. | TAG | DATE | E.C.NO. | TAG | DATE | E.C.NO. | TAG | DATE | E.C.NO. |
|---|---|---|---|---|---|---|---|---|---|---|---|
| A | 09-07-60 | 109500X | B | 10-24-60 | 109522 | C | 01-18-61 | 110422 | D | 03-08-61 | 110431B |
| E | 04-03-61 | 110434 | F | 01-04-63 | 116741 | | | | | | |

0482993

# MEMORY SWITCH DRIVE

1401 PF 46.37.91.2

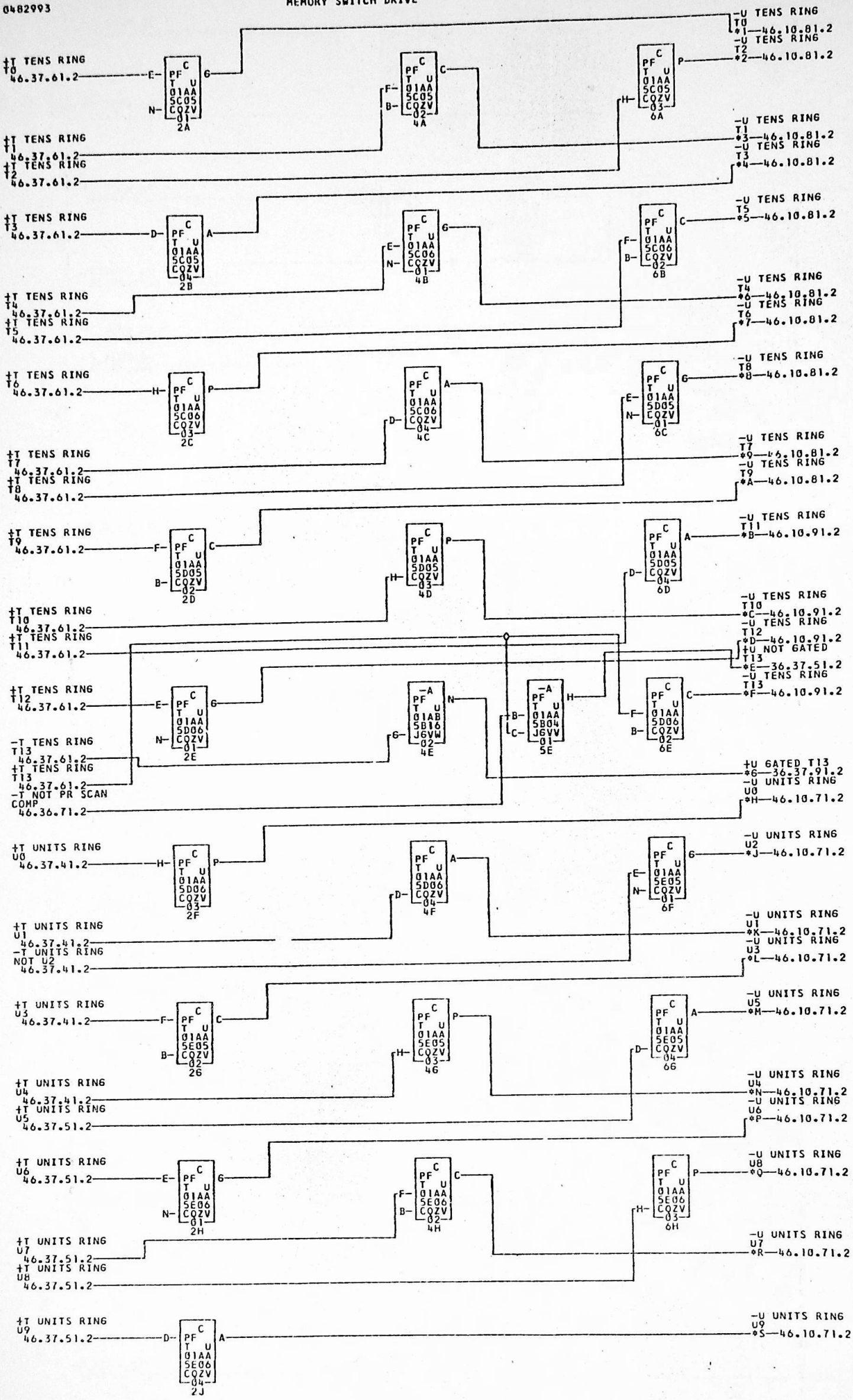


*1—01A5E25A *2—01A5E25C *3—01A5E25B *4—01A5E25D *5—01A5E25F *6—01A5E25E
*7—01A5E25G *8—01A5E25K *9—01A5E25H *A—01A5E25L *B—01A5E25N *C—01A5E25M
*D—01A5E25P *E—01A5E24R *F—01A5E25Q *G—01A5E24Q *H—01A5F25A *J—01A5F25C
*K—01A5F25B *L—01A5F25D *M—01A5F25F *N—01A5F25E *P—01A5F256 *Q—01A5F25N
*R—01A5F25H *S—01A5F25P

| COMMENTS | TAG | DATE | E.C.NO. | TAG | DATE | E.C.NO. | TAG | DATE | E.C.NO. | TAG | DATE | E.C.NO. |
|---|---|---|---|---|---|---|---|---|---|---|---|---|
| | A | 09-07-60 | 109500X | B | 05-02-61 | 110442 | C | 01-04-63 | 116741 | | | |

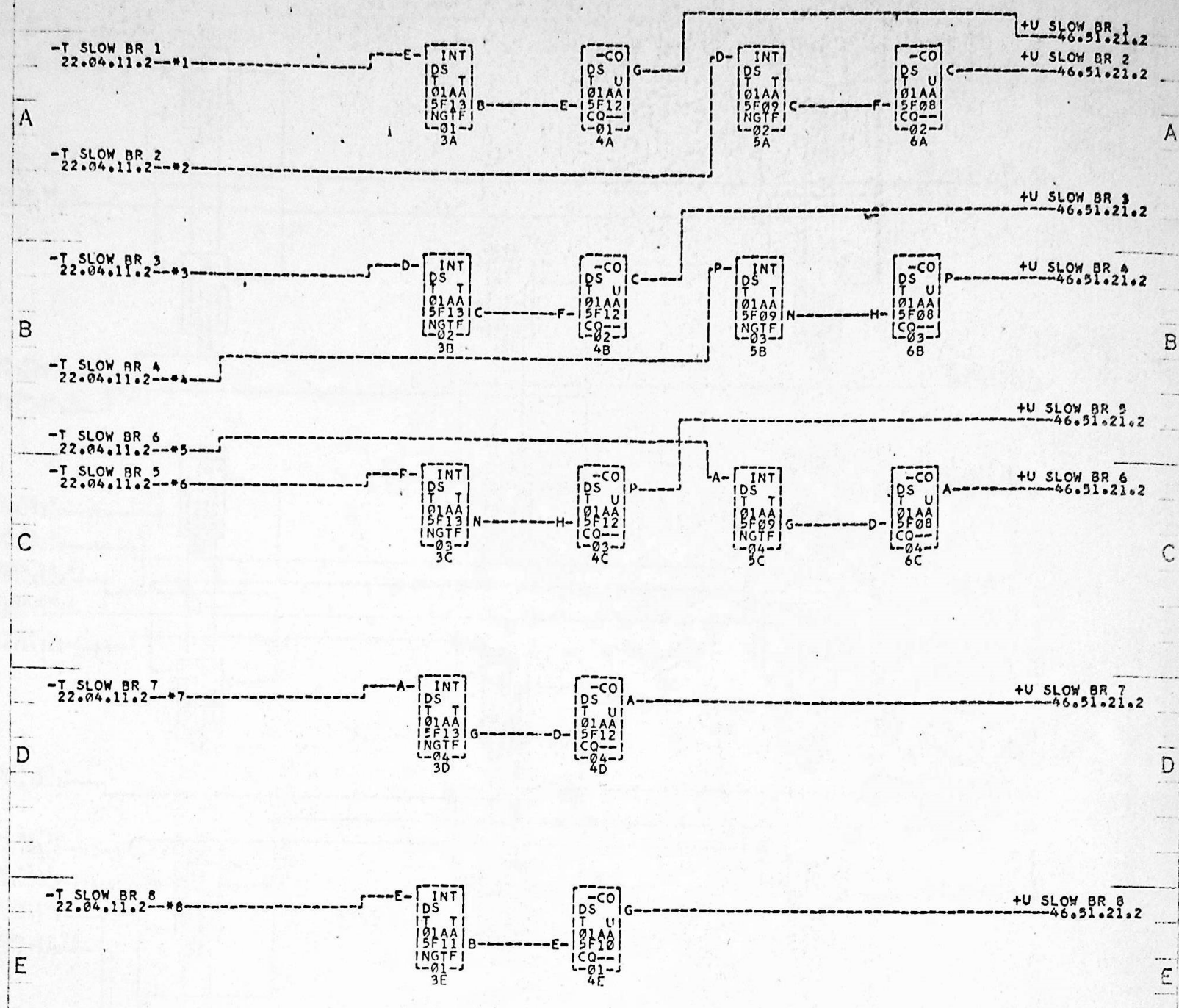


-T SLOW BR 9 22.04.11.2--*9 — +U SLOW BR 9 46.51.21.2

-T SLOW BR 10 22.04.11.2--*A — +U SLOW BR 10 46.51.21.2

-T SLOW BR 11 22.04.11.2--*B — +U SLOW BR 11 46.51.21.2

-T SLOW BR 12 22.04.11.2--*C — +U SLOW BR 12 46.51.21.2

*1--01A5A25A *2--01A5A25B *3--01A5A25C *4--01A5A25D *5--01A5A25F *6--01A5A25E
*7--01A5A25G *8--01A5A25H *9--01A5A25J *A--01A5A25K *B--01A5A25L *C--01A5A25M

| COMMENTS | TAG | DATE | E.C.NO. | TAG | DATE | E.C.NO. | TAG | DATE | E.C.NO. | TAG | DATE | E.C.NO. |
|---|---|---|---|---|---|---|---|---|---|---|---|---|
| | A | 09-07-60 | 109501P | B | 10-24-60 | 109521 | | | | | | |

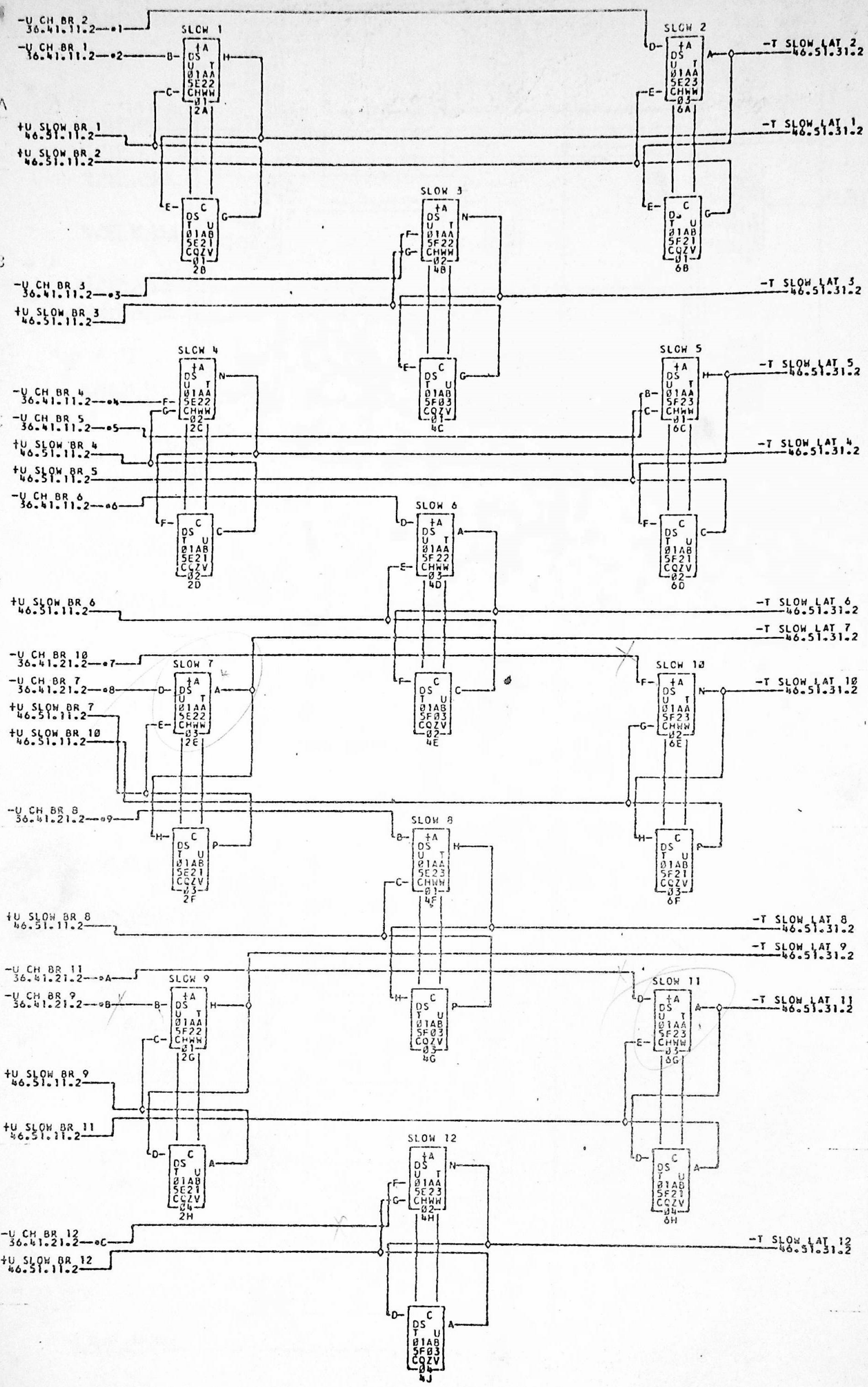


•1—01A5C25B •2—01A5C25A •3—01A5C25C •4—01A5C25D •5—01A5C25E •6—01A5C25F
•7—01A5C25K •8—01A5C25G •9—01A5C25H •A—01A5C25L •B—01A5C25J •C—01A5C25M

| COMMENTS | TAG | DATE | E.C.NO. | TAG | DATE | E.C.NO. | TAG | DATE | E.C.NO. | TAG | DATE | E.C.NO. |
|---|---|---|---|---|---|---|---|---|---|---|---|---|
| | A | 09-07-68 | 1095019 | B | 10-24-68 | 109521 | C | 03-09-71 | 1104318 | | | |

IBM SC33-4024-0S-1

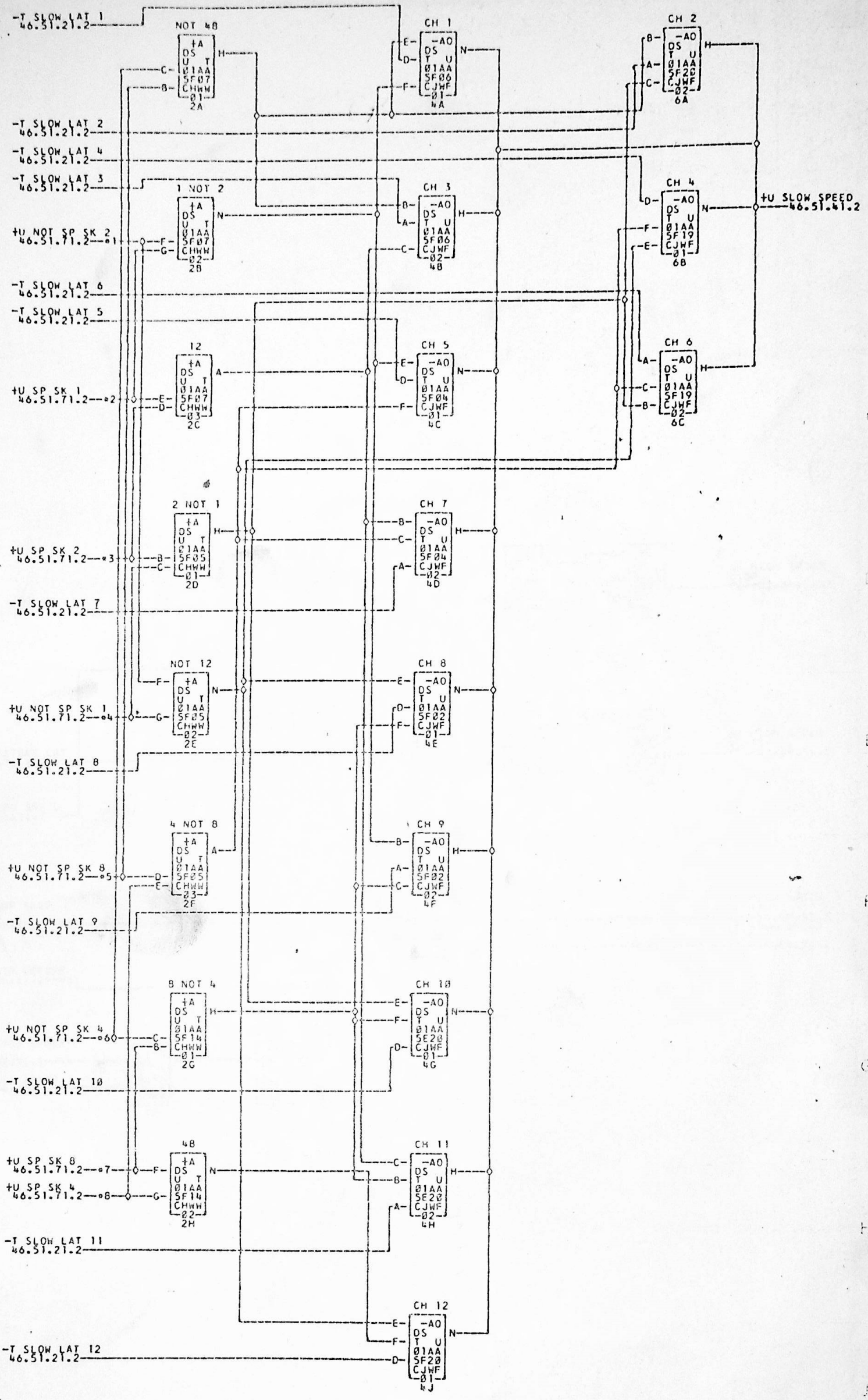


*1--Ø1A5B25G *2--Ø1A5B25D *3--Ø1A5B25C *4--Ø1A5B25H *5--Ø1A5B25E *6--Ø1A5B25F
*7--Ø1A5B25A *8--Ø1A5B25B

COMMENTS

| TAG | DATE | E.C.NO. | TAG | DATE | E.C.NO. | TAG | DATE | E.C.NO. | TAG | DATE | E.C.NO. |
|---|---|---|---|---|---|---|---|---|---|---|---|
| A | 09-07-60 | 109501P | B | 03-09-61 | 110431B | | | | | | |

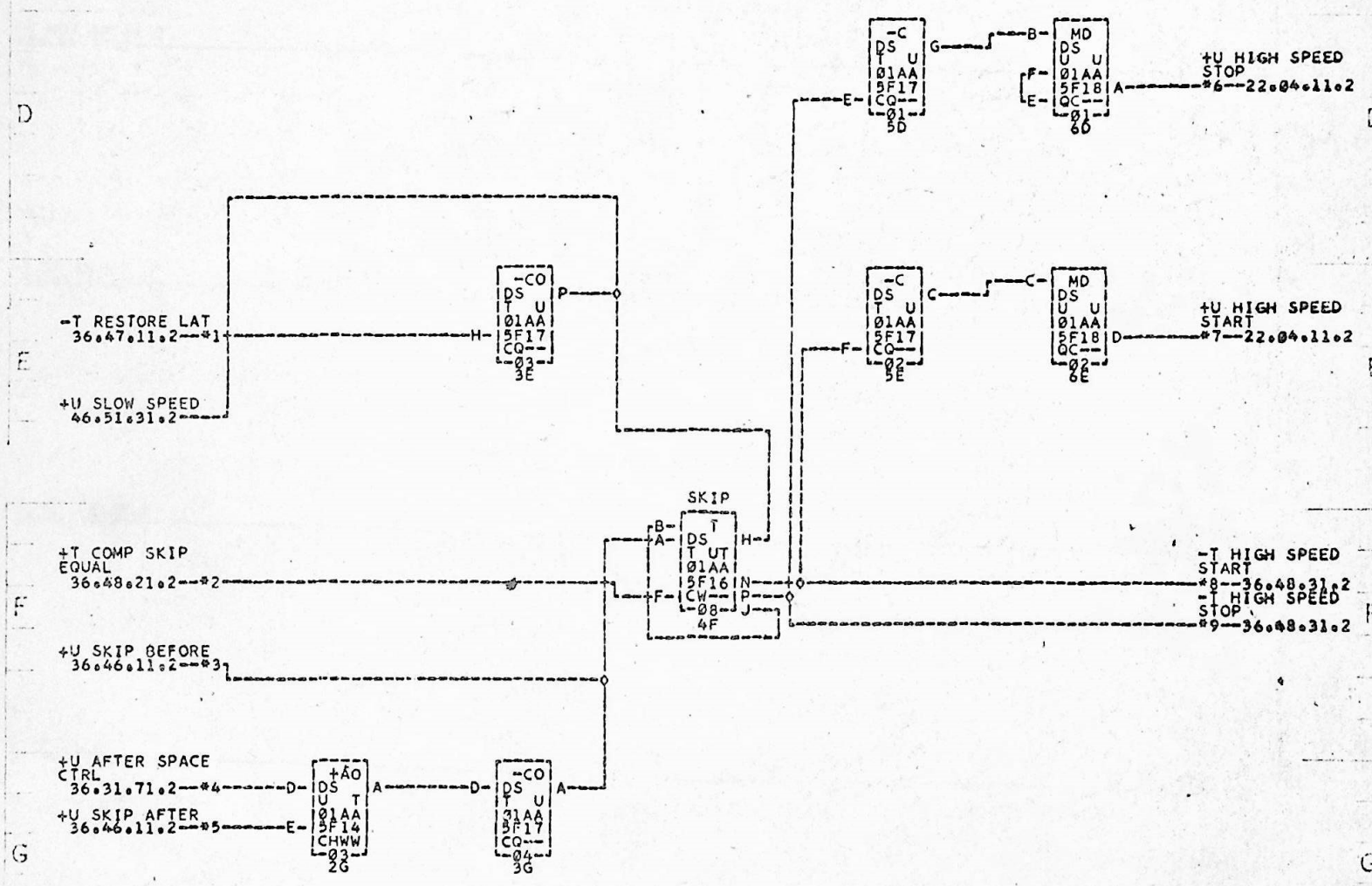


*1—01A5B25J *2—01A5B25K *3—01A5B25L *4—01A5B25N *5—01A5B25M *6—01A5A25P
*7—01A5A25N *8—01A5C25N *9—01A5C25Q

COMMENTS

| TAG | DATE | E.C.NO. | TAG | DATE | E.C.NO. | TAG | DATE | E.C.NO. | TAG | DATE | E.C.NO. |
|---|---|---|---|---|---|---|---|---|---|---|---|
| A | 09-07-60 | 1095012P | | | | | | | | | |

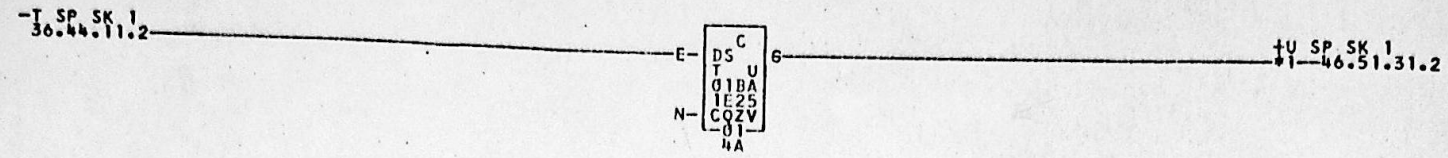


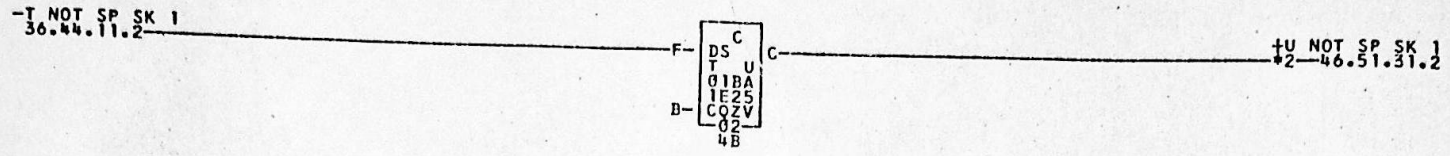


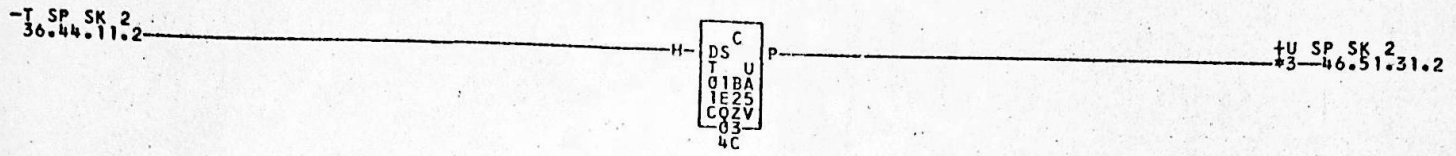


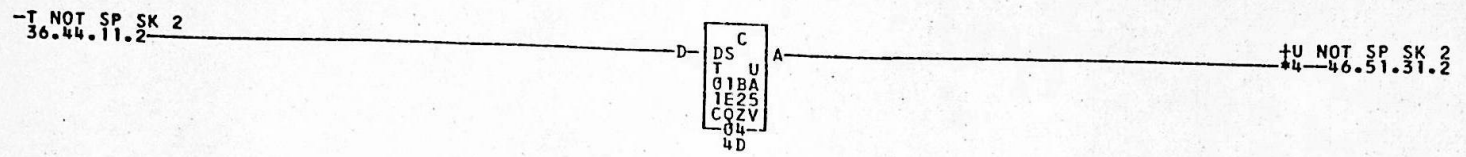


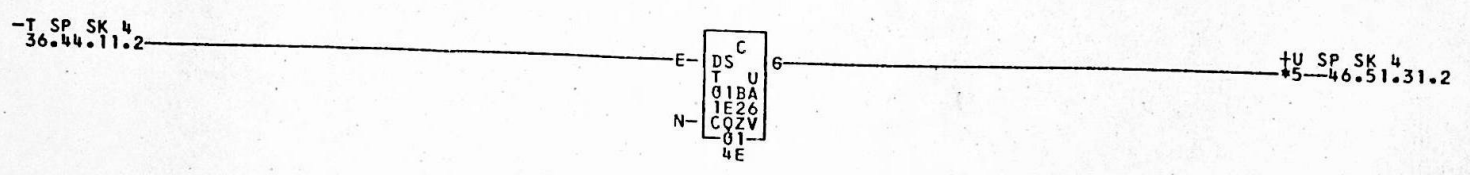


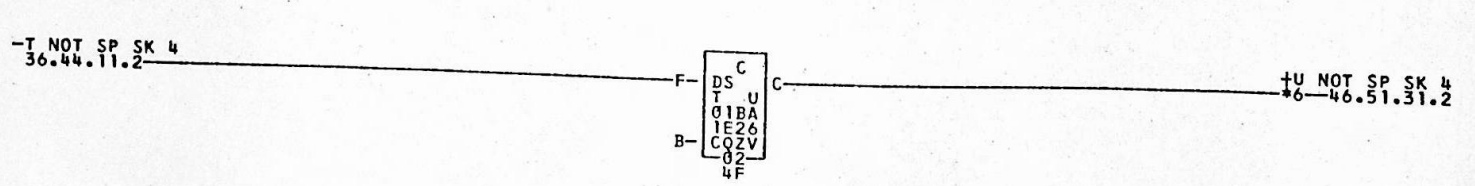


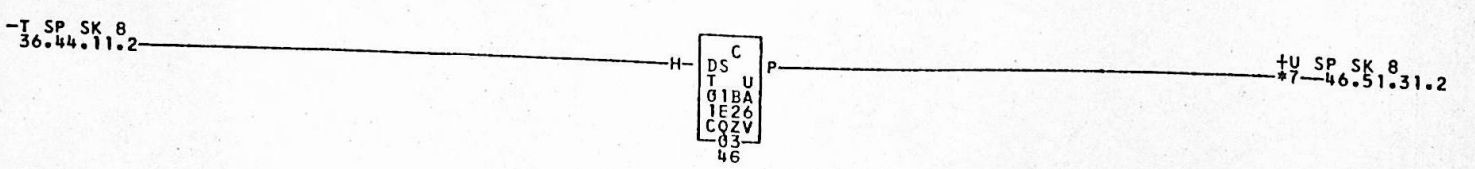


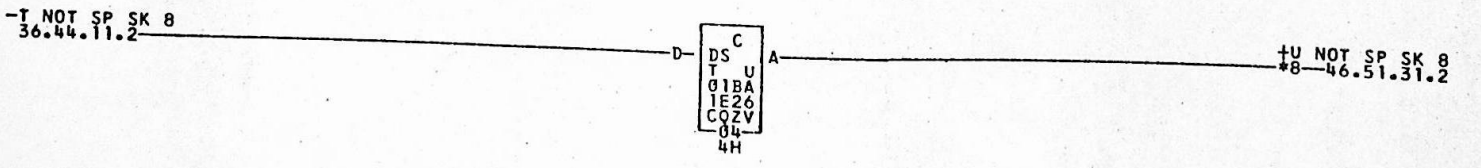


*1—01B1D03D
*7—01B1D03A

*2—01B1D03H
*8—01B1D03E

*3—01B1D03C
01A5B25E

*4—01B1D036

*5—01B1D03B

*6—01B1D03F

COMMENTS

| TAG | DATE | E.C.NO. | TAG | DATE | E.C.NO. | TAG | DATE | E.C.NO. | TAG | DATE | E.C.NO. |
|---|---|---|---|---|---|---|---|---|---|---|---|
| A | 06-05-61 | 110320P | B | 12-21-62 | 114052 | | | | | | |